Return to ALPHA TOC
Return to SECTION TOC

Republic/Manatrol

Hydraulic and Pneumatic Control Valves

Catalog HY14-3000/US

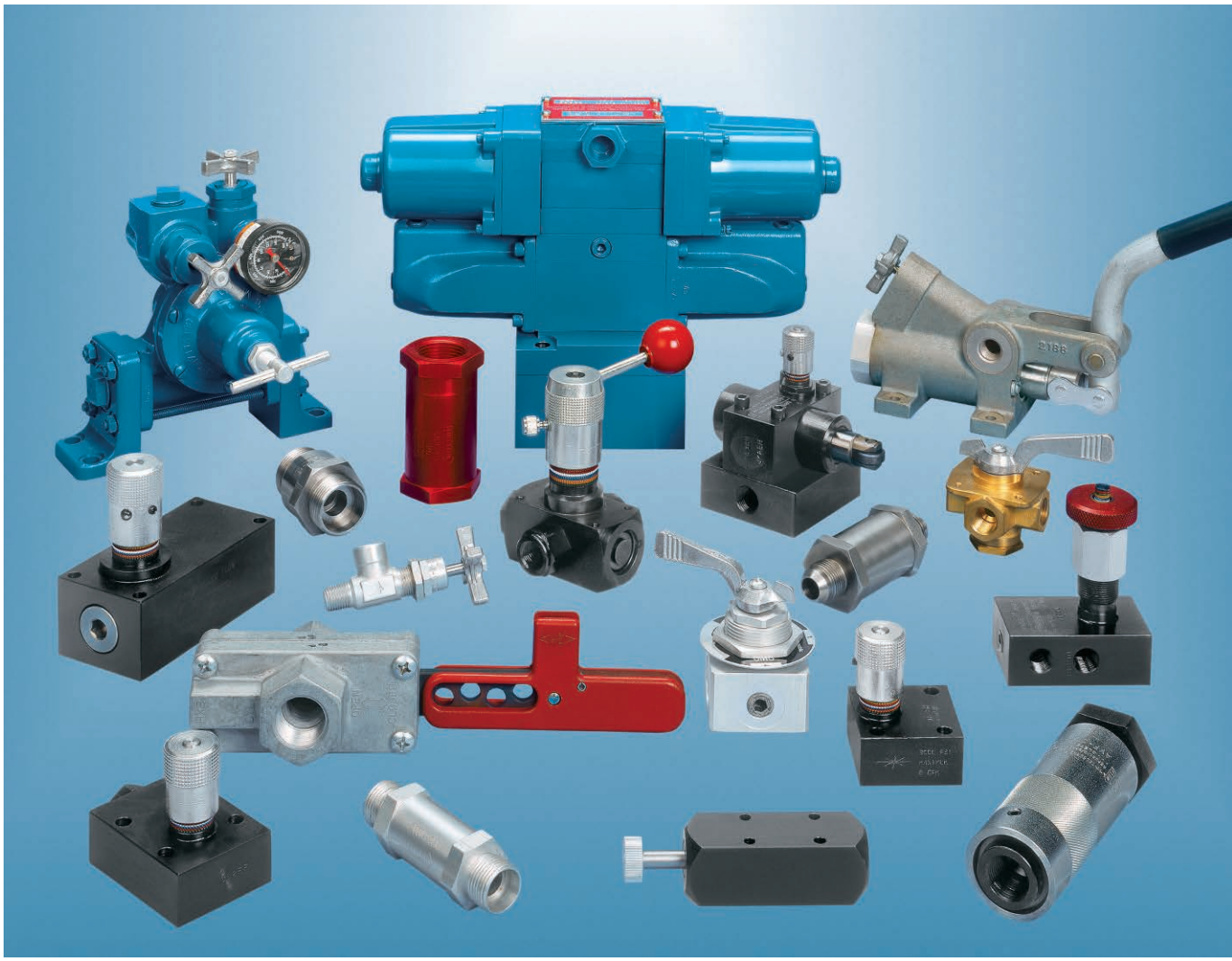

⚠ WARNING

FAILURE OR IMPROPER SELECTION OR IMPROPER USE OF THE PRODUCTS AND/OR SYSTEMS DESCRIBED HEREIN OR RELATED ITEMS CAN CAUSE DEATH, PERSONAL INJURY AND PROPERTY DAMAGE.

This document and other information from Parker Hannifin Corporation, its subsidiaries and authorized distributors provide product and/or system options for further investigation by users having technical expertise. It is important that you analyze all aspects of your application and review the information concerning the product or system in the current product catalog. Due to the variety of operating conditions and applications for these products or systems, the user, through its own analysis and testing, is solely responsible for making the final selection of the products and systems and assuring that all performance, safety and warning requirements of the application are met.

The products described herein, including without limitation, product features, specifications, designs, availability and pricing, are subject to change by Parker Hannifin Corporation and its subsidiaries at any time without notice.

Offer of Sale

The items described in this document are hereby offered for sale by Parker Hannifin Corporation, its subsidiaries or its authorized distributors. This offer and its acceptance are governed by the provisions stated in the "Offer of Sale".

3000sprdincvr.p65, dd

Parker Hannifin Corporation
Hydraulic Valve Division
Elyria, Ohio, USA

Return to ALPHA TOC
Return to SECTION TOC

Alphanumeric Index

Return to ALPHA TOC
Return to SECTION TOC

Valve Function / Series Index

Return to ALPHA TOC
Return to SECTION TOC

Return to ALPHA TOC
Return to SECTION TOC
A

Manifold Mounted Lo-Torq Directional Control Valves

General Description

Series 8000E valves are 2, 3 and 4-way manual selector valves with near zero leakage characteristics and are rated to 207 Bar (3000 PSI) for liquids and 138 Bar (2000 PSI) for air. The valve design requires low actuation torque and can be used in applications where loads must be held for long periods and under difficult conditions.

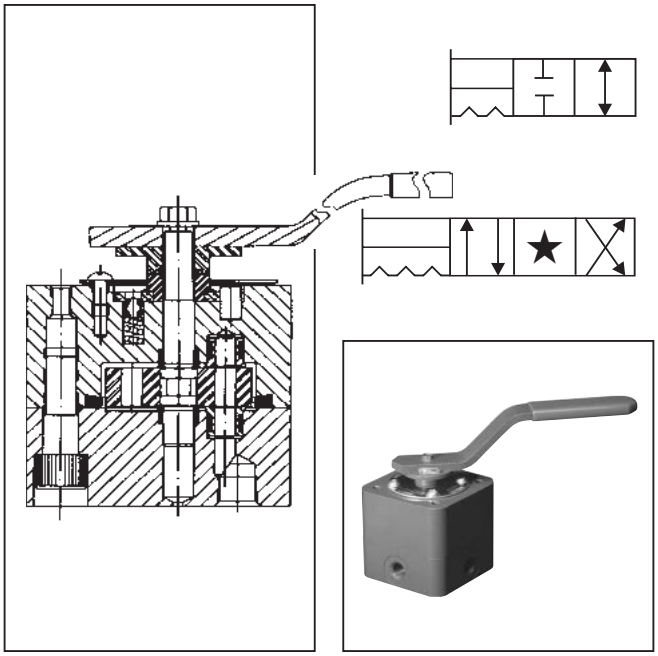

Features

- Shear-type positive seal.
- Zero leakage (1 drop per min. per pressure port).
- High contamination tolerance.
- Long life due to wiping action of seals and disk.
- Low turning torque.
- Panel mounting is standard.

Specifications

Service Applications	Lubricated air, hydraulic oil, and water. For case pressure or exhaust port pressure applications above 17.3 Bar (250 PSI), consult factory.
Maximum Operating Pressure	Working: Liquids - 207 Bar (3000 PSI) Air - 138 Bar (2000 PSI) Proof: Liquids - 310.5 Bar (4500 PSI) Air - 207 Bar (3000 PSI) Burst: 517.5 Bar (7500 PSI)
Porting	Bottom or side NPT: Pipe threads Sizes 1/4", 1/2" & 1" IST: Internal straight threads per AND10050 Sizes: 6, 10, & 16
Mounting	Subplate - Sizes 6, 10 & 16

Material	Body & Cap: Steel Disk: Stainless steel type 440 Shaft: Stainless steel type 416 Seals: Stainless steel type 440 Spring Seals: Stainless steel O-rings: Synthetic rubber compatible with media Back-up rings: PTFE Handle: Steel Finish: Paint Note: Steel bodies and caps for water or air service are electroless nickel plated. Water service valves are equipped with grease fittings and require periodic lubrication with a waterproof grease.
Operating Temperature	-40°C to +121°C (-40°F to +250°F) Higher on special order

Valve Size				Weight Lbs.	CV Factor P. to A. or P. to B.	Flow Passage Diameter	Handle Pull – Lbs.			
							8000E		R8000E	
Subplate	**SAE**	**Tube**	**Pipe**	**Steel**	**8000E**	**8000E**	**Air**	**Oil**	**Air**	**Oil**
Size 6	#6	6	1/4	5-1/2	1.0	.250 In.	10	9	15	14
Size 10	#10	10	1/2	10	2.8	.437 In.	15	13	21	18
Size 16	#16	16	1	22	8.5	.750 In.	18	15	30	25

Ordering Information

80	5	1	E	-	1/4	H	S	2
Prefix for Special Feature	3000 PSI Series	Flow Pattern	Type of Porting	Design Series	Size	Service Media	Materials	O-Ring Code	Suffix Options
See Option Page for Complete List	1 2-Way Shut-off	1 Side Ported			1/4 NPT	A Lubricated Air	S Steel	2 Nitrile	See Option Page for Complete List
	4 4-Way Closed Center	2 Bottom Ported			1/2 NPT	H Hydraulic Oil		28 Fluorocarbon	
	5 4-Way Tandem Center	3 Subplate Mounted			1 NPT	W Water		52 EPR	
	7 4-Way Manipulator Closed Center				6 IST			Others Available Per Request	
	8 4-Way Manipulator Open Center				10 IST				
	9 3-Way				16 IST				
					6 Subplate				
					10 Subplate				
					16 Subplate				

Dimensions

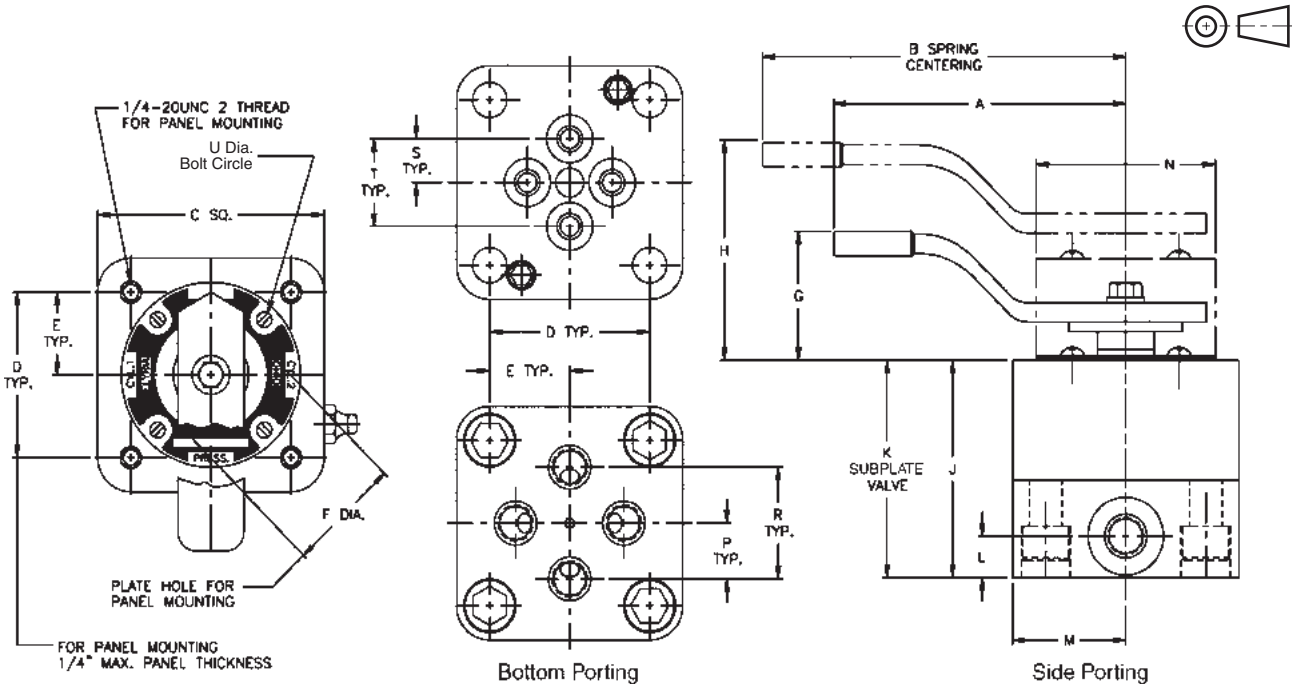

Valve Size				All Dimensions are in Inches																		Subplate Mounted	
Sub-Plate	SAE	Tube	Pipe	A	B	C	D	E	F	G	H	J	K	L	M	N	P	R	S	T	U	Mt'g. Bolt	Torq.
Size 6	#6	6	1/4	6	8	3	2 1/8	1 1/16	1	2 1/8	2 21/32	2 27/32	2 21/64	17/32	1 1/2	2 3/8	23/32	1 7/16	9/16	1 1/8	2	7/16 - 20NF 2 x 2 1/2 Lg.	700 In. – Lbs.
Size 10	#10	10	1/2	7	10	3 1/2	2 1/2	1 1/4	1	2 3/8	3 7/64	3 37/64	2 55/64	49/64	1 3/4	2 15/16	31/32	1 15/16	13/16	1 5/8	2 1/2	7/16 - 20NF 2 x 3 Lg.	700 In. – Lbs.
Size 16	#16	16	1	10	12	4 1/2	3 3/16	1 19/32	1 3/8	2 15/16	3 3/8	4 23/32	3 45/64	1	2 1/4	3 11/16	1 3/8	2 3/4	1 11/64	2 11/32	3 3/16	1/2 - 20NF 2 x 4 Lg.	1,370 In. – Lbs.

3000-A1.p65, dd

Parker Hannifin Corporation
Hydraulic Valve Division
Elyria, Ohio, USA

General Description

Series 8100E valves are 2, 3 and 4-way manual selector valves with near zero leakage characteristics and are rated to 414 Bar (6000 PSI) for liquids and 276 Bar (4000 PSI) for air. The valve design requires low actuation torque and can be used in applications where loads must be held for long periods and under difficult conditions.

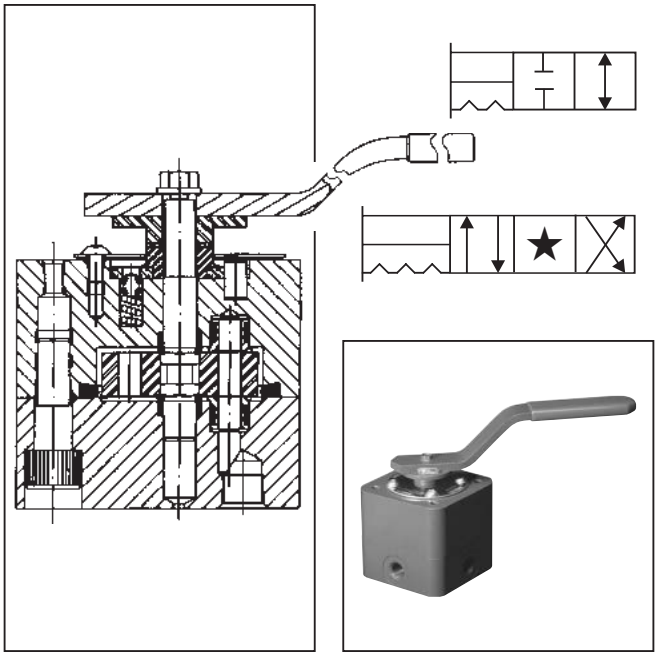

Features

- Shear-type positive seal.
- Zero leakage (1 drop per min. per pressure port).
- High contamination tolerance.
- Long life due to wiping action of seals and disk.
- Low turning torque.
- Panel mounting is standard.

Specifications

Service Applications	Lubricated air, hydraulic oil, and water. For case pressure or exhaust port pressure applications above 17.3 Bar (250 PSI), consult factory.
Maximum Operating Pressure	Working: Liquids - 414 Bar (6000 PSI) Air - 276 Bar (4000 PSI) Proof: Liquids - 621 Bar (9000 PSI) Air - 621 Bar (9000 PSI) Burst: 1035 Bar (15,000 PSI)
Porting	Bottom or side NPT: Pipe threads Sizes 1/4", 1/2" & 1" IST: Internal straight threads per AND10050 Sizes: 6, 10, & 16
Mounting	Subplate - Sizes 6, 10 & 16

Material	Body & Cap: Steel Disk: Stainless steel type 440 Shaft: Stainless steel type 416 Seals: Stainless steel type 440 Spring Seals: Stainless steel O-rings: Synthetic rubber compatible with media Back-up rings: PTFE Handle: Steel Finish: Paint Note: Steel bodies and caps for water or air service are electroless nickel plated. Water service valves are equipped with grease fittings and require periodic lubrication with a waterproof grease.
Operating Temperature	-40°C to +121°C (-40°F to +250°F) Higher on special order

Valve Size				Weight Lbs.	CV Factor P. to A. or P. to B.	Flow Passage Diameter	Handle Pull – Lbs.			
							8100E		R8100E	
Subplate	**SAE**	**Tube**	**Pipe**	**Steel**	**8100E**	**8100E**	**Air**	**Oil**	**Air**	**Oil**
Size 6	#6	6	1/4	5-1/2	1.0	.250 In.	18	15	17	16
Size 10	#10	10	1/2	10	1.2	.250 In.	15	13	22	19
Size 16	#16	16	1	22	3.2	.437 In.	18	15	28	26

Ordering Information

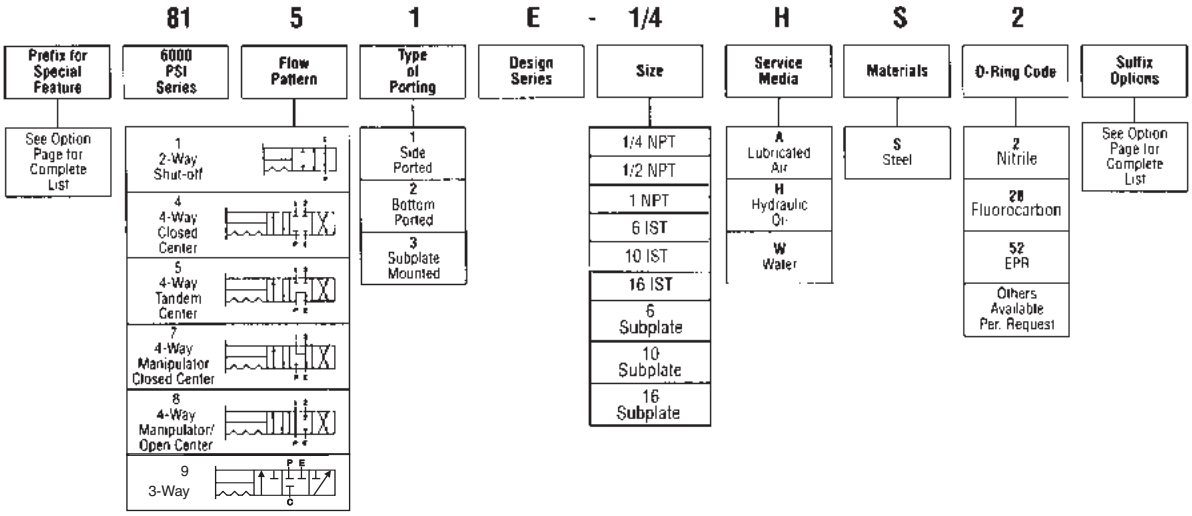

Dimensions

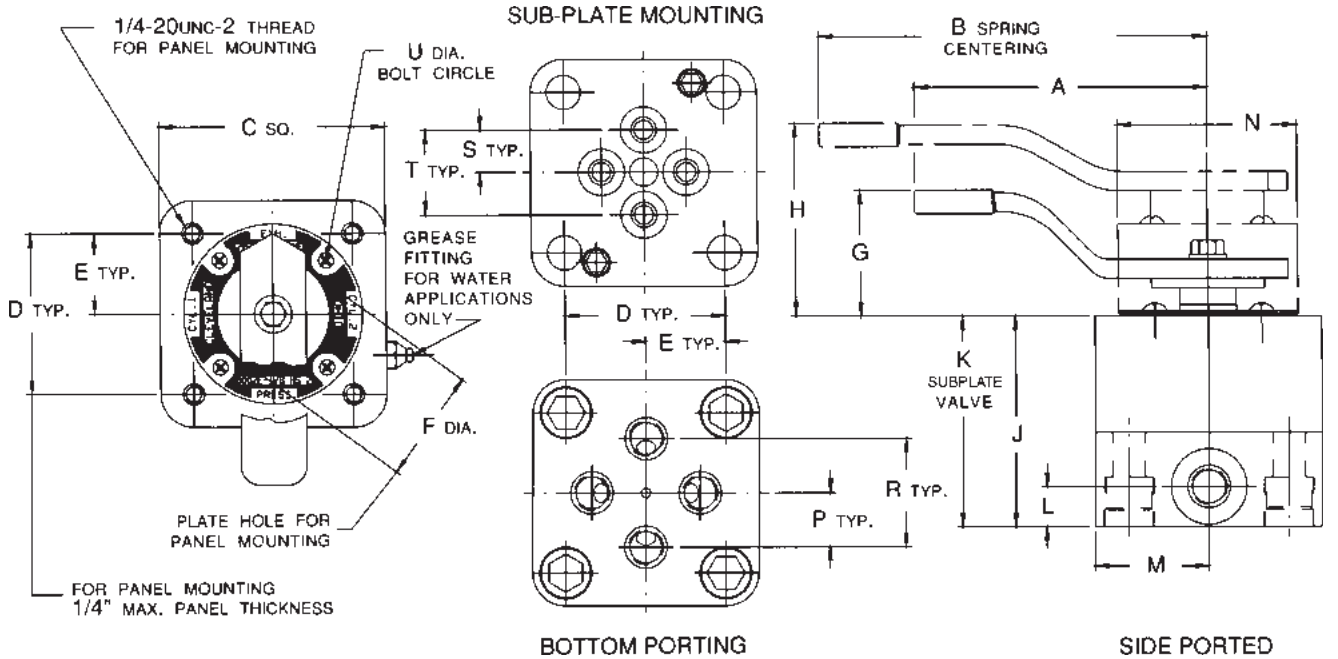

Valve Size				All Dimensions are in Inches																		Subplate Mounted	
Sub-Plate	SAE	Tube	Pipe	A	B	C	D	E	F	G	H	J	K	L	M	N	P	R	S	T	U	Mt'g. Bolt	Torq.
Size 6	#6	6	1/4	6	8	3	$2\frac{1}{8}$	$1\frac{1}{16}$	1	$2\frac{1}{8}$	$2\frac{21}{32}$	$2\frac{27}{32}$	$2\frac{21}{64}$	$\frac{17}{32}$	$1\frac{1}{2}$	$2\frac{3}{8}$	$\frac{23}{32}$	$1\frac{7}{16}$	$\frac{9}{16}$	$1\frac{1}{8}$	2	7/16 - 20NF 2 x $2\frac{1}{2}$ Lg.	865 In. – Lbs.
Size 10	#10	10	1/2	7	10	$3\frac{1}{2}$	$2\frac{1}{2}$	$1\frac{1}{4}$	1	$2\frac{3}{8}$	$3\frac{7}{64}$	$3\frac{37}{64}$	$2\frac{55}{64}$	$\frac{49}{64}$	$1\frac{3}{4}$	$2\frac{15}{16}$	$\frac{13}{16}$	$1\frac{5}{8}$	$\frac{9}{16}$	$1\frac{1}{8}$	$2\frac{1}{2}$	7/16 - 20NF 2 x 3 Lg.	865 In. – Lbs.
Size 16	#16	16	1	10	12	$4\frac{1}{2}$	$3\frac{3}{16}$	$1\frac{19}{32}$	$1\frac{3}{8}$	$2\frac{15}{16}$	$3\frac{3}{8}$	$4\frac{23}{32}$	$3\frac{45}{64}$	1	$2\frac{1}{4}$	$3\frac{11}{16}$	$1\frac{3}{8}$	$2\frac{3}{4}$	$\frac{13}{16}$	$1\frac{5}{8}$	$3\frac{3}{16}$	5/8 - 18NF 2 x $3\frac{1}{2}$ Lg.	3,250 In. – Lbs.

3000-A1.p65, dd

Parker Hannifin Corporation
Hydraulic Valve Division
Elyria, Ohio, USA

General Description

Series 8000C and 8100C valves are 2 and 4-way manual selector valves with near zero leakage characteristics. Series 8000C are rated to 207 Bar (3000 PSI) for liquids and 138 Bar (2000 PSI) for air. Series 8100C are rated to 414 Bar (6000 PSI) for liquids and 276 Bar (4000 PSI) for air. The valve design requires low actuation torque and can be used in applications where loads must be held for long periods and under difficult conditions.

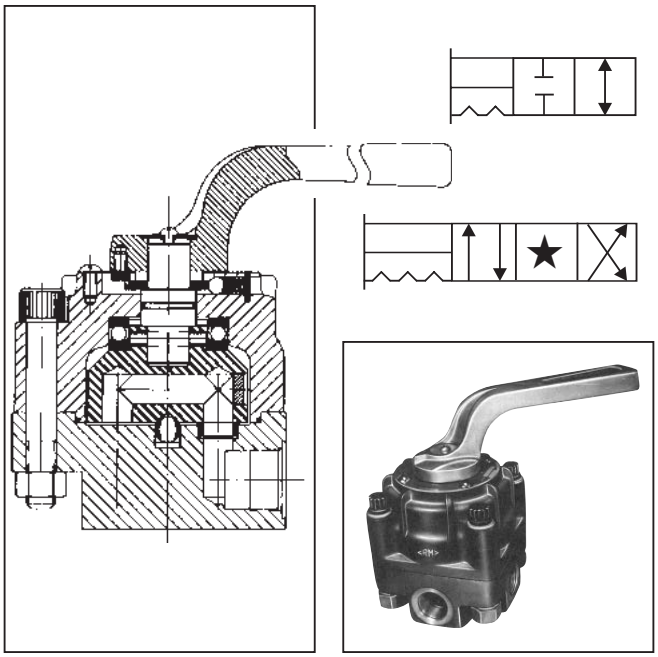

Features

- Shear-type positive seal.
- Zero leakage (1 drop per min. per pressure port).
- High contamination tolerance.
- Standard valves are interflow.
- Long life due to wiping action of seals and disk.
- Low turning torque.
- Panel mounting is standard.

Specifications

Service Applications	Lubricated air, hydraulic oil, and water. For case pressure or exhaust port pressure applications above 17.3 Bar (250 PSI), consult factory.
Maximum Operating Pressure	Working: 8000C Liquids - 207 Bar (3000 PSI) Air - 138 Bar (2000 PSI) 8100C Liquids - 414 Bar (6000 PSI) Air - 276 Bar (4000 PSI) Proof: 8000C Liquids - 621 Bar (4500 PSI) Air - 207 Bar (3000 PSI) 8100C Liquids - 621 Bar (9000 PSI) Air - 414 Bar (6000 PSI) Burst: 8000C Liquids - 1035 Bar (15,000 PSI) Air - 345 Bar (5000 PSI) 8100C Liquids - 1035 Bar (15,000 PSI) Air - 690 Bar (10,000 PSI)
Mounting	Subplate - Sizes 6, 10 & 16
Porting	Bottom or side NPT: Pipe threads, sizes 1 1/4"& 1-1/2" IST: Internal straight threads per AND10050, sizes 20 & 24 SAE: Straight threads, sizes #20 & #24
Material	Body & Cap: Steel or ductile iron Disk: Stainless steel type 440 Shaft: Stainless steel type 303 Seals: Stainless steel type 440 Spring Seals: Stainless steel O-rings: Synthetic rubber compatible with media Back-up rings: PTFE Handle: Aluminum alloy Finish: Paint Note: Steel bodies and caps for water or air service are electroless nickel plated. Water service valves are equipped with grease fittings and require periodic lubrication with a waterproof grease.
Operating Temperature	-40°C to +121°C (-40°F to +250°F) Higher on special order

Valve Size				Weight Lbs.	CV Factor P. to A. or P. to B.		Flow Passage Diameter		Handle Pull-Lbs.			
									8000C		8100C	
Sub-Plate	SAE	Tube	Pipe	Steel	8000C	8100C	8000C	8100C	Air	Oil	Air	Oil
	# 20	20	1-1/4	75	24	13	1.250 In.	.875 In.	31	31	33	33
Size 24	# 24	24	1-1/2	75	24	13	1.250 In.	.875 In.	31	31	33	33

3000-A1.p65, dd

Parker Hannifin Corporation
Hydraulic Valve Division
Elyria, Ohio, USA

Ordering Information

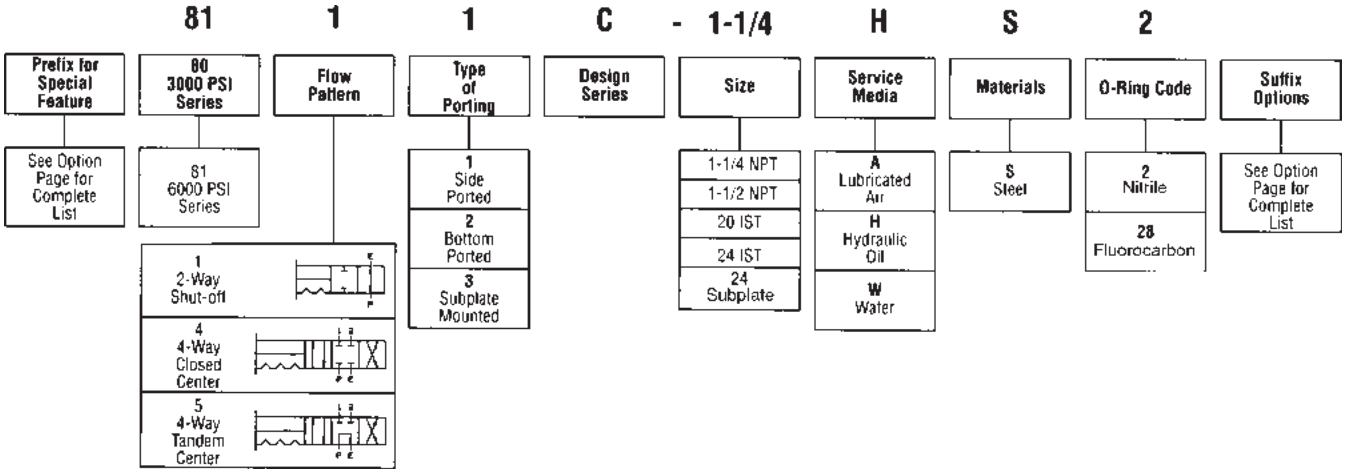

Dimensions

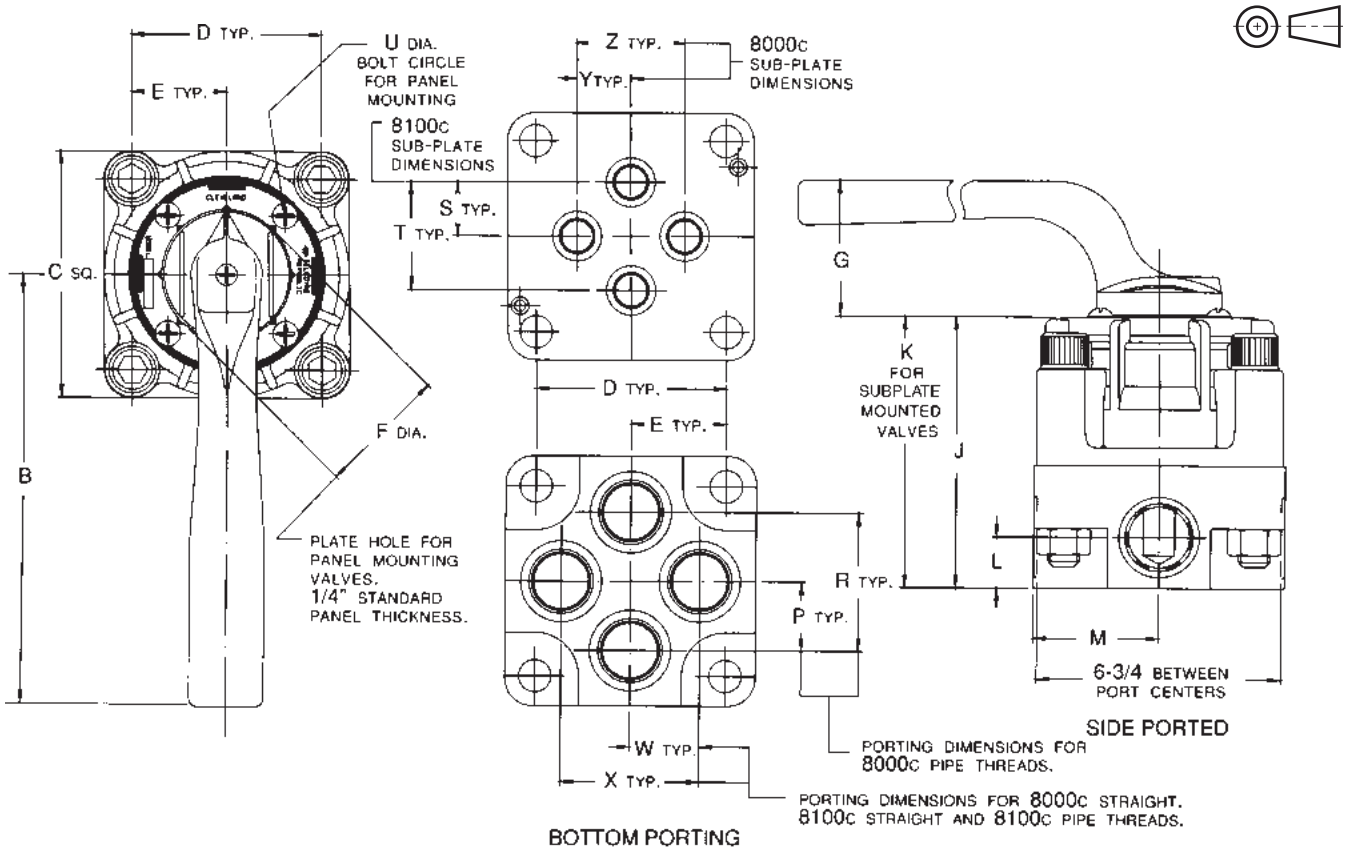

Valve Size				All Dimensions are in Inches																			Subplate Mounted	
Sub-Plate	SAE	Tube	Pipe	B	C	D	E	F	G	J	K	L	M	P	R	S	T	U	W	X	Y	Z	Mt'g. Bolt	Torq.
Size 24	# 20	20	1-1/4	12	7	$5\frac{5}{16}$	$2\frac{21}{32}$	$3\frac{5}{8}$	$3\frac{3}{4}$	$7\frac{5}{8}$	$5\frac{5}{8}$	$1\frac{7}{16}$	$3\frac{1}{2}$	$1\frac{15}{16}$	$3\frac{7}{8}$	$1\frac{1}{2}$	3	$4\frac{5}{8}$	$2\frac{1}{8}$	$4\frac{1}{4}$	$1\frac{15}{16}$	$3\frac{7}{8}$	7/8 - 9CN2 x $5\frac{1}{2}$ Lg.	5400 In. – Lbs.
	# 24	24	1-1/2																					

3000-A1.p65, dd

Parker Hannifin Corporation
Hydraulic Valve Division
Elyria, Ohio, USA

General Description

Series 8400E valves are 2, 3 and 4 way miniature selector valves with near zero leakage characteristics and are rated to 207 Bar (3000 PSI) for liquids and 138 Bar (2000 PSI) for air. The valve design requires low actuation torque and can be used for handling small amounts of fluid at high pressure and when space is at a premium.

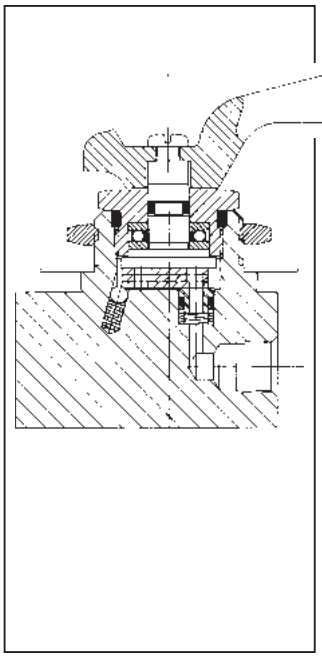

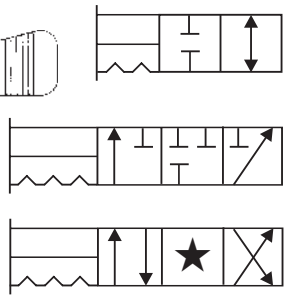

Features

- Shear-type positive seal.
- Zero leakage (1 drop per min. per pressure port).
- High contamination tolerance.
- Long life due to wiping action of seals and disk.
- Low turning torque.
- Panel mounting is standard.

Specifications

Service Applications	Lubricated air, hydraulic oil, and water. For case pressure or exhaust port pressure applications above 17.3 Bar (250 PSI), consult factory.
Maximum Operating Pressure	Working: Liquids - 207 Bar (3000 PSI) Air - 138 Bar (2000 PSI) Proof: Liquids - 310.5 Bar (4500 PSI) Air - 207 Bar (3000 PSI) Burst: 517.5 Bar (7500 PSI)
Porting	NPT: Pipe threads, bottom or side Sizes 1/8" & 1/4" IST: Internal straight threads per AND10050, side only Sizes 4 & 6 SAE: Straight threads, side only Sizes #4 & #6
Mounting	Subplate - Size 6

Material	Body & Cap: Steel Disk: Stainless steel type 440 Shaft: Stainless steel type 303 Seals: Stainless steel type 440 O-rings: Synthetic rubber compatible with media Back-up rings: PTFE Handle: Steel, aluminum & plastic Finish: Paint or anodize Stop pin: Steel Note: Steel bodies and caps for water or air service are electroless nickel plated. Water service valves are equipped with grease fittings and require periodic lubrication with a waterproof grease.
Operating Temperature	-40°C to +121°C (-40°F to +250°F) Higher on special order

Valve Size				Weight Lbs.		CV Factor P. to A. or P. to B.	Flow Passage Diameter	Handle Pull – Lbs.			
								8400E		R8400E	
Subplate	SAE	Tube	Pipe	Steel	Alum.	8400E	8400E	Air	Oil	Air	Oil
Size 6	#4	4	1/8	1.8	3/4	.26	.125 In.	10	12	8	8
	#6	6	1/4	1.8	3/4	.29	.125 In.	10	12	8	8

DO3 Subplate Mounted With Standard Port Connections

Part No.	Port #1	Port #2	Port #3	Port #4
8413E	Exhaust	Pressure	—	—
8423E	Cylinder	Pressure	Cylinder	—
8443E	Pressure	Cylinder	Exhaust	Cylinder
8453E	Pressure	Cylinder	Exhaust	Cylinder
8473E*	Pressure	Cylinder	Exhaust	Cylinder

Porting Connections

Part No.	Port #1	Port #2	Port #3	Port #4
8411E 8412E	Pressure	Exhaust	—	—
8421E 8422E	Pressure	Cylinder	Exhaust	—
8441E 8442E	Exhaust	Cylinder	Pressure	Cylinder
8451E 8452E	Exhaust	Cylinder	Pressure	Cylinder
8471E* 8472E*	Exhaust	Cylinder	Pressure	Cylinder
8481E 8482E	Exhaust	Cylinder	Pressure	Cylinder

Ordering Information

Prefix for Special Feature	Mini Lo-Torq Series	Flow Pattern	Type of Porting	Design Series	Size	Materials	O-Ring Code	Panel Mounting	Suffix Options
84	1	1	1	E	- 1/8	D	2	P	
See Option Page for Complete List		1 2-Way Shut-Off 2 3-Way 4 4-Way Closed Center 5 4-Way Tandem Center 7* 4-Way Manipulator Closed Center	1 Side Ported 2 Bottom Ported 3 Subplate Mounted		1/8 NPT 1/4 NPT 4 6 6 Subplate 104 SAE #4 106 SAE #6	D Aluminum Alloy	2 Nitrile 28 Fluorocarbon 52 EPR		See Option Page for Complete List

NOTES:

*1. P/N 8473E connects pressure ports to cylinder ports in the center position when mounted on a standard DO3 Subplate.
2. Other port connections that may be used by the customer are his options.

Dimensions

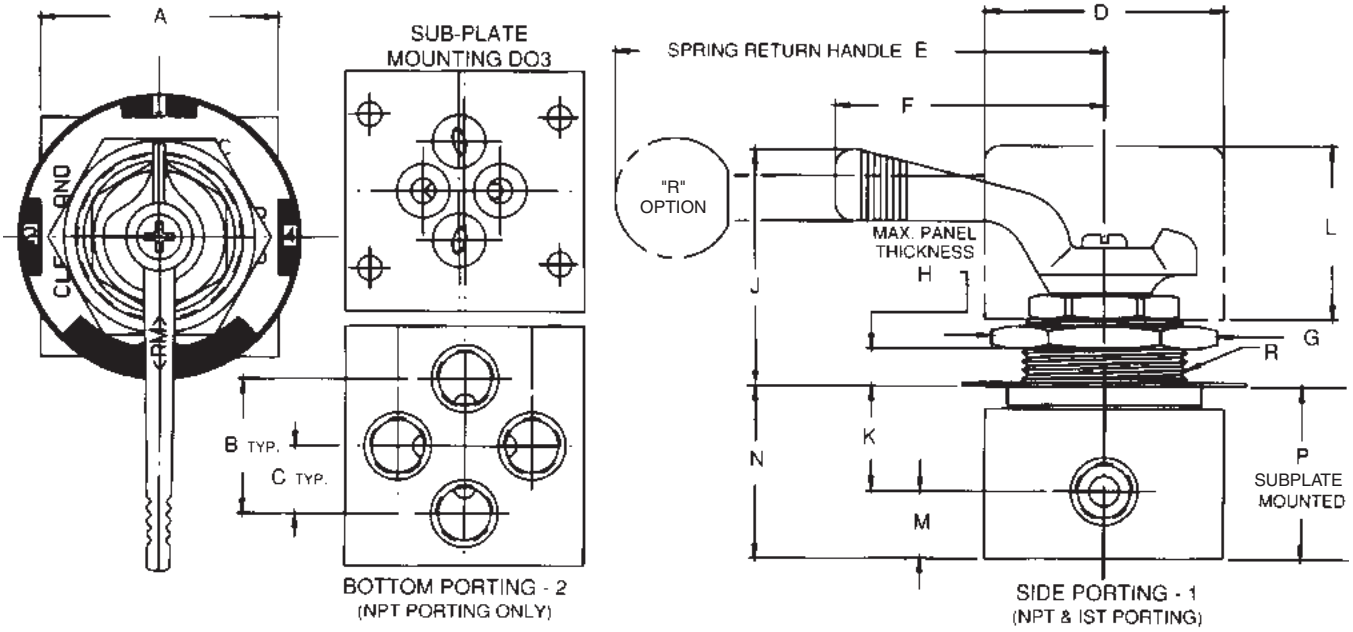

Valve Size				All Dimensions are in Inches														
Sub-Plate	SAE	Tube	Pipe	A	B	C	D	E	F	G	H	J	K	L	M	N	P	R
	# 4	4	1/8	2	$1\frac{1}{8}$	$\frac{9}{16}$	2	$4\frac{13}{16}$	$2\frac{1}{4}$	$1\frac{5}{8}$	$\frac{5}{16}$	$1\frac{15}{16}$	$\frac{7}{8}$	$1\frac{7}{16}$	$\frac{9}{16}$	$1\frac{7}{16}$	$1\frac{1}{8}$	$1\frac{3}{8}$ - 14 Thread
Size 6	# 6	6	1/4	2	$1\frac{1}{8}$	$\frac{9}{16}$	2	$4\frac{13}{16}$	$2\frac{1}{4}$	$1\frac{5}{8}$	$\frac{5}{16}$	$1\frac{15}{16}$	$\frac{7}{8}$	$1\frac{7}{16}$	$\frac{9}{16}$	$1\frac{7}{16}$	$1\frac{1}{8}$	$1\frac{3}{8}$ - 14 Thread

3000-A1.p65, dd

Parker Hannifin Corporation
Hydraulic Valve Division
Elyria, Ohio, USA

General Description

Series 8500 valves are 2, 3 and 4-way manual selector valves with near zero leakage characteristics and are rated to 207 Bar (3000 PSI). The valve design requires low actuation torque and can be used in air, oil and water applications.

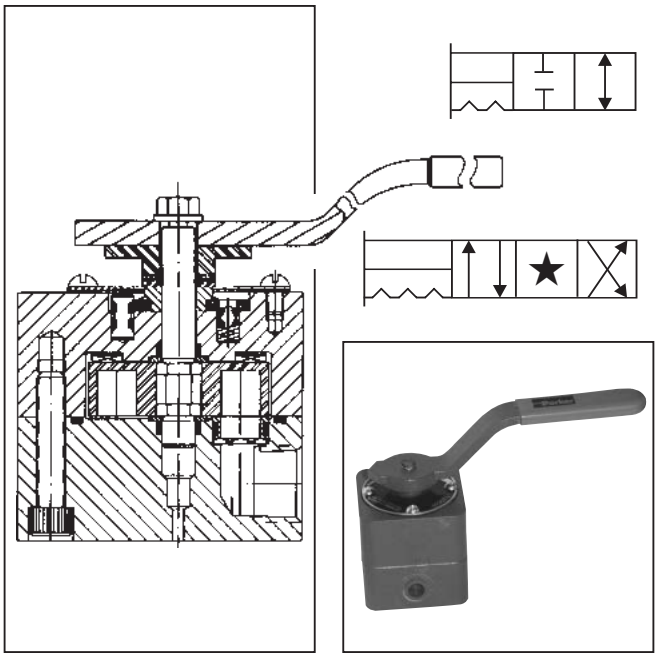

Features

- Shear-type positive seal.
- Zero leakage (1 drop per min. per pressure port).
- High contamination tolerance.
- Long life due to wiping action of seals and disk.
- Low turning torque.
- Panel mounting is standard.

Specifications

Service Applications	Lubricated air, hydraulic oil, and water. For case pressure or exhaust port pressure applications above 17.3 Bar (250 PSI), consult factory.
Maximum Operating Pressure	Working: 207 Bar (3000 PSI) Proof: 310.5 Bar (4500 PSI) Burst: 517.5 Bar (7500 PSI)
Porting	Bottom or side NPT: Pipe threads Sizes 1/8", 1/4", 3/8", 1/2", 3/4" & 1" IST: Internal straight threads per AND10050 Sizes 4, 6, 8 10, 12 & 16 SAE: Straight threads Sizes #4, #6, #8, #10, #12 & #16
Mounting	Subplate - Sizes 10 & 16
Material	Body & Cap: Aluminum alloy anodized Disk: Stainless steel type 440 Shaft: Stainless steel type 416 Seals: Stainless steel type 440 O-rings: Synthetic rubber compatible with media Spring seals: Stainless steel Back-up rings: PTFE Handle: Steel, aluminum & plastic Finish: Paint
Operating Temperature	-40°C to +121°C (-40°F to +250°F) Higher on special order

Valve Size				Weight Lbs.	CV Factor P. to A. or P. to B.	Flow Passage Diameter	Handle Pull – Lbs.			
							8500E		R8500E	
Subplate	**IST**	**Tube**	**Pipe**	**Steel**	**8500E**	**8500E**	**Air**	**Oil**	**Air**	**Oil**
—	#6	6	1/4	2.5	1.7	.437 In.	13	15	11	17
Size 10	#10	10	1/2	2.5	2.4	.437 In.	13	15	11	17
Size 16	#16	16	1	13	8.5	.750 In.	15	18	26	30

Ordering Information

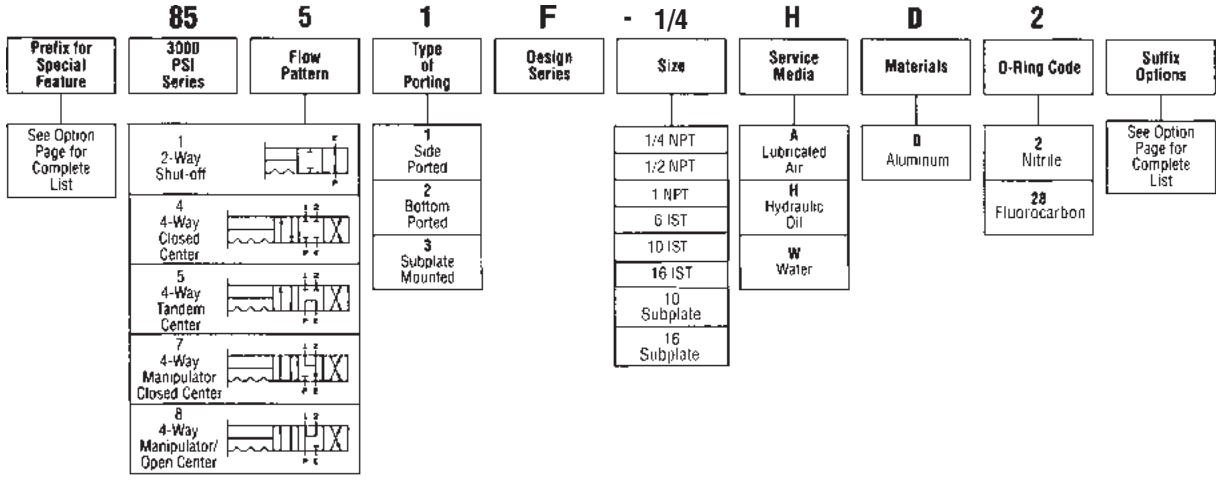

Dimensions
Subplate Mounting

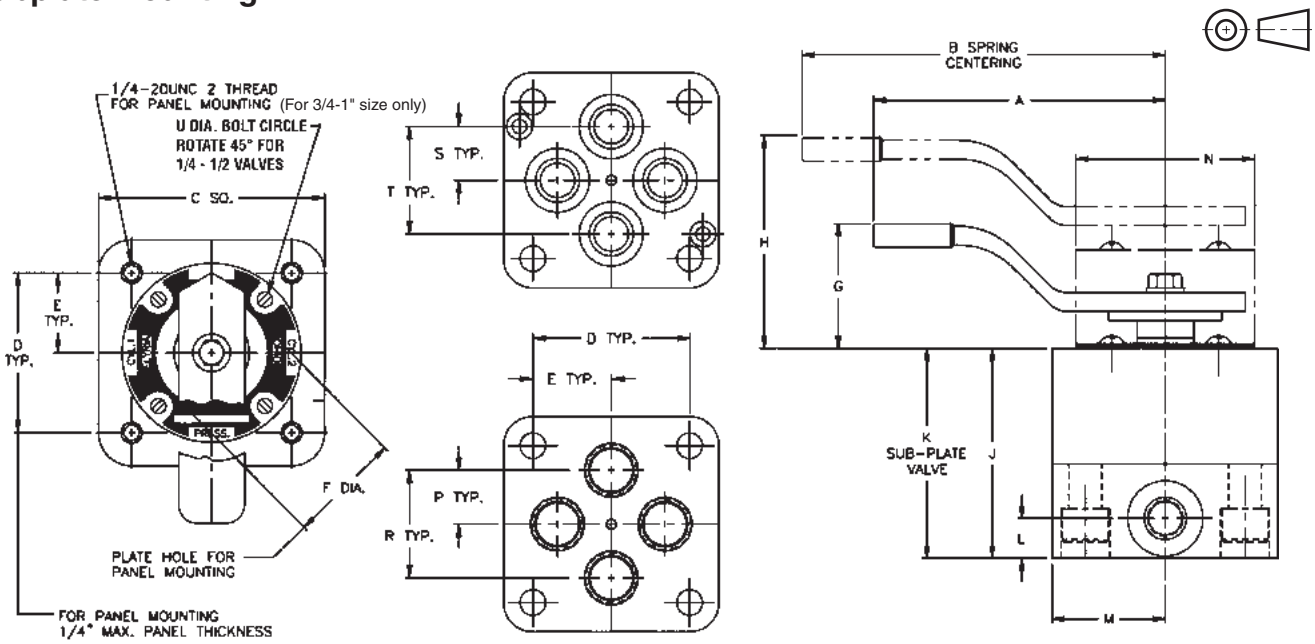

Bottom Porting

Side Porting

Valve Size				All Dimensions are in Inches																		Subplate Mounted	
Sub-Plate	SAE	Tube	Pipe	A	B	C	D	E	F	G	H	J	K	L	M	N	P	R	S	T	U	Mt'g. Bolt	Torq.
—	#6	6	1/4	6	6	$2\frac{3}{4}$	2	1	$1\frac{21}{32}$	$1\frac{31}{32}$	$2\frac{25}{32}$	$2\frac{13}{16}$	$2\frac{1}{32}$	$\frac{5}{8}$	$1\frac{3}{8}$	$2\frac{3}{8}$	$\frac{23}{32}$	$1\frac{7}{16}$	$\frac{11}{16}$	$1\frac{3}{8}$	$2\frac{1}{8}$	5/16 - 24NF x 2	250 In. – Lbs.
Size 10	#10	10	1/2	6	6	$2\frac{3}{4}$	2	1	$1\frac{21}{32}$	$1\frac{31}{32}$	$2\frac{25}{32}$	$2\frac{13}{16}$	$2\frac{1}{32}$	$\frac{5}{8}$	$1\frac{3}{8}$	$2\frac{3}{8}$	$\frac{23}{32}$	$1\frac{7}{16}$	$\frac{11}{16}$	$1\frac{3}{8}$	$2\frac{1}{8}$	5/16 - 24NF x 2	250 In. – Lbs.
Size 16	#16	16	1	10	12	$4\frac{1}{2}$	$3\frac{3}{16}$	$1\frac{19}{32}$	$1\frac{3}{8}$	$2\frac{15}{16}$	$3\frac{3}{8}$	$4\frac{23}{32}$	$3\frac{45}{64}$	1	$2\frac{1}{4}$	$3\frac{11}{16}$	$1\frac{3}{8}$	$2\frac{3}{4}$	$1\frac{11}{64}$	$2\frac{11}{32}$	$3\frac{3}{16}$	1/2 - 20 x 4 Lg.	1,370 In. – Lbs.

3000-A1.p65, dd

Parker Hannifin Corporation
Hydraulic Valve Division
Elyria, Ohio, USA

Special Feature Letter		Location	8000 - 8100			8400	8500	
			$\frac{1}{8}$ - $\frac{1}{2}$	$\frac{3}{4}$ - 1	$1\frac{1}{4}$ - $1\frac{1}{2}$	$\frac{1}{8}$ - $\frac{1}{4}$	$\frac{1}{8}$ - $\frac{1}{2}$	$\frac{3}{4}$ - 1
F	-Fourth Seal	P	A	A	A	N/A	A	A
FR	-Fourth Seal & Spring Return	P	A	A	A	N/A	A	A
R	-Spring Return	P	A	A	A	A	A	A
CR	-Normally Closed Spring Return	P	A	A	A	N/A	A	A
H	-Less Handle	S	A	A	A	A	A	A
P	-Locking Kit	S	A	A	N/A	N/A	N/A	A
L	-No Left Handle Position	S	A	A	A	N/A	A	A
R	-No Right Handle Position	S	A	A	A	N/A	A	A
M	-No Center Detent	S	A	A	A	A	A	A

P=Prefix S=Suffix A=Available N/A=Not Available

Combined Options Not Available

1. Options M, L & R available individually only.
2. Options FR limits maximum pressure on valve to 1500 PSI.

Return to ALPHA TOC
Return to SECTION TOC

Manifold Mounted Exectrol Directional Control Valves

B

General Description

Series 21100 Exectrol directional control valves are direct solenoid operated 4-way control valves. A slide and balanced seals are used which provides near zero leakage. The valves have a high tolerance to media contamination as each movement of the slide wipes the sealing surfaces clean which in turn results in long service life.

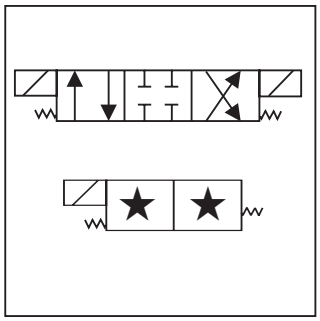

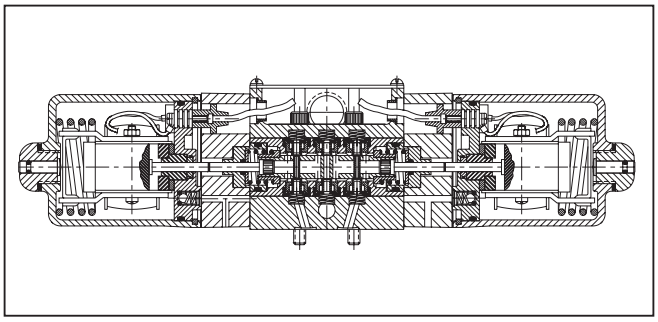

Features

- Shear-type positive seal.
- Zero leakage (8 drops per min. maximum).
- Ideal for water soluble systems (95-5).
- Pressures up to 414 Bar (6000 PSI).
- Long life, easy maintenance.
- Standard valves are interflow.
- No packing to wear or cut.
- High tolerance to contamination.
- High tolerance to silting.
- Manual overides are standard.

Electrical Data		Weight	
Inrush Current	4.2 Amps Maximum	One Solenoid	Two Solenoids
Holding Current	.85 Amps Maximum		
Drop-Out Voltage	Approx. 75% Rated Voltage	9.2 Lbs.	12 Lbs.
Voltage Required to Pull Back After Drop-Out	Approx. 95% Rated Voltage		

Specifications

Service Applications	Hydraulic oil. Water containing minimum of 5% soluble oil. Suggest water soluble oil with a sodium sulphonate-based emulsifier. Oil should have a viscosity of 250-350 SSU at 38°C (100°F). Others available on special order.
Maximum Operating Pressure	Working: 414 Bar (6000 PSI) *Proof: 621 Bar (9000 PSI) *Burst: 1035 Bar (15,000 PSI) *Applicable to pressure and cylinder ports only Note: Installation of this valve should ensure that exhaust port pressure does not exceed cylinder port pressures by more than 3.5 Bar (50 PSI) and never exceed 69 Bar (1000 PSI)
Flow	11.4 LPM (3 GPM) rated maximum
CV Factor	0.28
Internal Leakage	8 drops per min. maximum
Mounting	Subplate. Mounting bolts furnished
Material	Cover, Body, Bottom Plate, Inserts, Washers, Spring Retainer, Screws, Retainer Plate: Steel Name Plate, End Cap, Retainer Plate: Aluminum alloy, anodized Slide, Seals, Springs, Pilot Choke Plug: Stainless Steel O-rings: Synthetic rubber
Operating Temperature	-40°C to +107°C (-40°F to +225°F) (with Code 02 O-rings)

Ordering Information

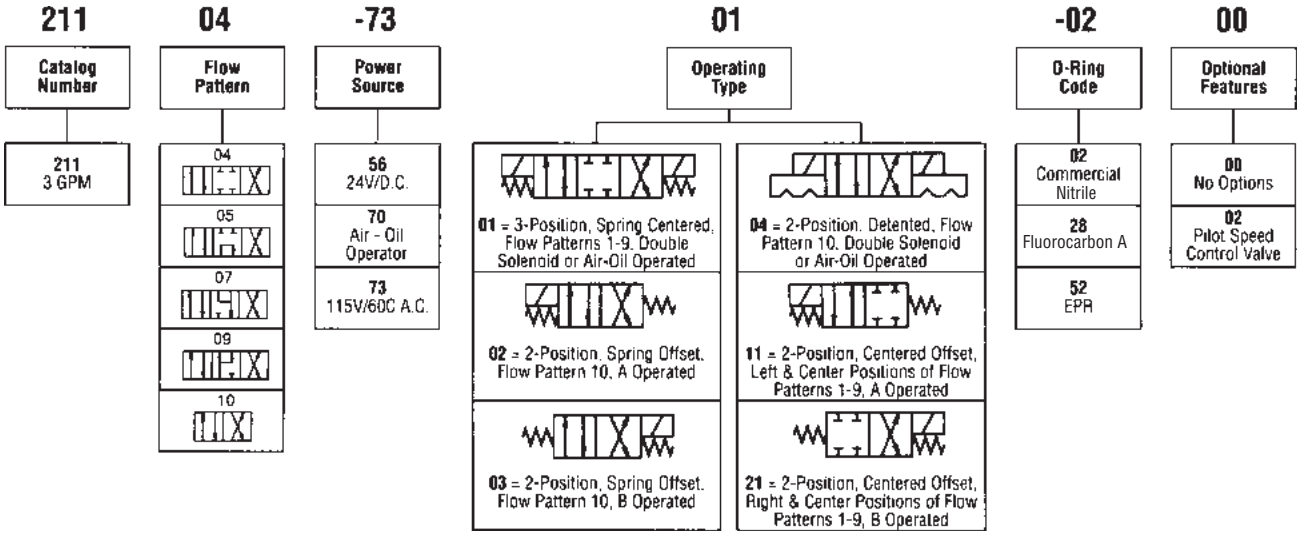

Note:
Do not use these valves in series or tandem circuits.

Dimensions

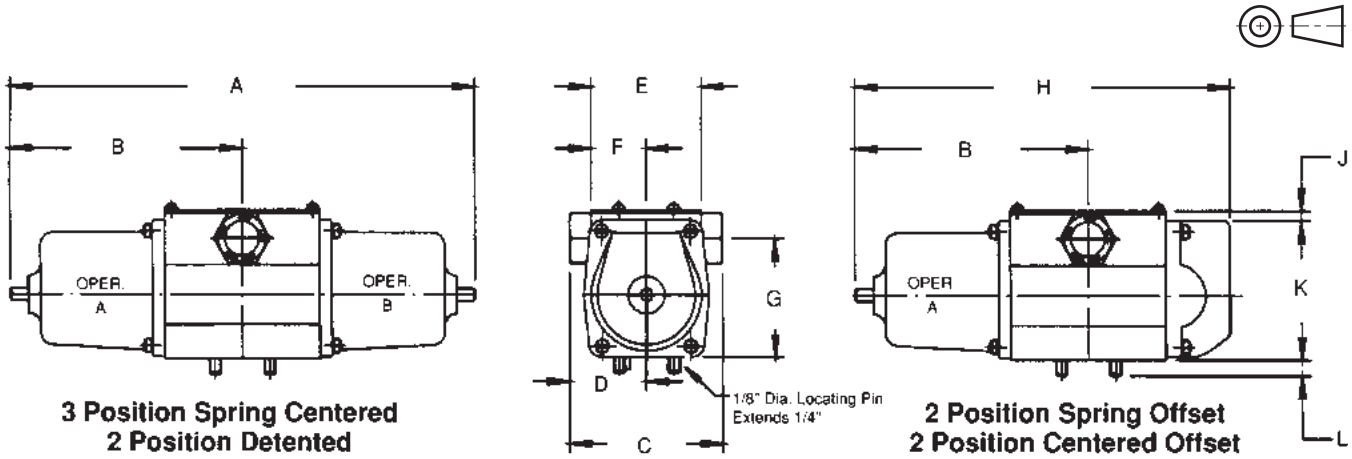

3 Position Spring Centered
2 Position Detented

2 Position Spring Offset
2 Position Centered Offset

Power Source	Operating Type		All Dimensions are in Inches											Mounting Bolt Torque
			A	B	C	D	E	F	G	H	J	K	L	
Double Solenoid A.C.	01 04	3-Position Spring Centered 2-Position Detented	$12\frac{3}{4}$	$6\frac{3}{8}$	$3\frac{1}{8}$	$1\frac{9}{16}$	$2\frac{3}{4}$	$1\frac{3}{8}$	$2\frac{7}{16}$	—	$\frac{1}{8}$	3	$\frac{5}{16}$	160 to 180 Inch Lbs.
Single Solenoid A.C.	02+03 11+21	2-Position Spring Offset 2-Position Centered Offset	—	$6\frac{3}{8}$	$3\frac{1}{8}$	$1\frac{9}{16}$	$2\frac{3}{4}$	$1\frac{3}{8}$	$2\frac{7}{16}$	$9\frac{5}{16}$	$\frac{1}{8}$	3	$\frac{5}{16}$	
Double Solenoid D.C.	01 04	3-Position Spring Centered 2-Position Detented	$14\frac{15}{16}$	$7\frac{15}{32}$	$3\frac{1}{8}$	$1\frac{9}{16}$	$2\frac{3}{4}$	$1\frac{3}{8}$	$2\frac{7}{16}$	—	$\frac{1}{8}$	3	$\frac{5}{16}$	
Single Solenoid D.C.	02+03 11+21	2-Position Spring Offset 2-Position Centered Offset	—	$7\frac{15}{32}$	$3\frac{1}{8}$	$1\frac{9}{16}$	$2\frac{3}{4}$	$1\frac{3}{8}$	$2\frac{7}{16}$	$10\frac{3}{8}$	$\frac{1}{8}$	3	$\frac{5}{16}$	
Pneu. or Hyd. Double Operator	01 04	3-Position Spring Centered 2-Position Detented	$9\frac{9}{16}$	$4\frac{25}{32}$	$3\frac{1}{8}$	$1\frac{9}{16}$	$2\frac{3}{4}$	$1\frac{3}{8}$	$2\frac{7}{16}$	—	$\frac{1}{8}$	3	$\frac{5}{16}$	
Pneu. or Hyd. Single Operator	02+03 11+21	2-Position Spring Offset 2-Position Centered Offset	—	$4\frac{25}{32}$	$3\frac{1}{8}$	$1\frac{9}{16}$	$2\frac{3}{4}$	$1\frac{3}{8}$	$2\frac{7}{16}$	$7\frac{11}{16}$	$\frac{1}{8}$	3	$\frac{5}{16}$	

Note: Pneumatic and hydraulic operators, operating pressure is 20 to 150 PSI.

3000-B1.p65, dd

Parker Hannifin Corporation
Hydraulic Valve Division
Elyria, Ohio, USA

B

General Description

Series 21200 Exectrol directional control valves are direct solenoid operated 4-way control valves. A slide and balanced seals are used which provides near zero leakage. The valves have a high tolerance to media contamination as each movement of the slide wipes the sealing surfaces clean which in turn results in long service life.

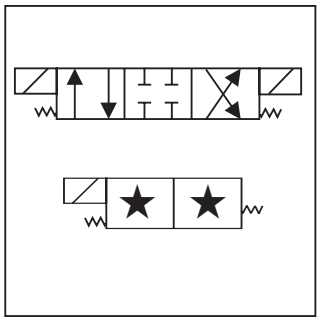

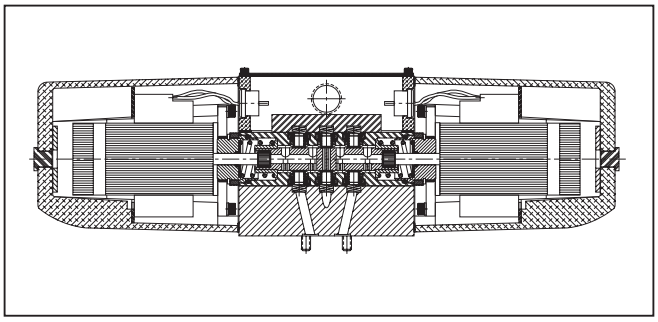

Features

- Shear-type positive seal.
- Zero leakage (8 drops per min. Max. – Test pressure 276 Bar (4000 PSI).
- Ideal for water soluble systems (95-5).
- Pressures up to 414 Bar (6000 PSI).
- Long life, easy maintenance.
- Standard valves are interflow.
- No packing to wear or cut.
- High tolerance to contamination.
- High tolerance to silting.
- Manual overides are standard.

Electrical Data		Weight	
Inrush Current	16 Amps Maximum	One Solenoid	Two Solenoids
Holding Current	2.5 Amps Maximum		
Drop-Out Voltage	Approx. 75% Rated Voltage	20 Lbs.	26 Lbs.
Voltage Required to Pull Back After Drop-Out	Approx. 95% Rated Voltage		

Specifications

Service Applications	Hydraulic oil. Water containing minimum of 5% soluble oil. Suggest water soluble oil with a sodium sulphonate-based emulsifier. Oil should have a viscosity of 250-350 SSU at 38°C (100°F). Others available on special order.
Maximum Operating Pressure	Working: 414 Bar (6000 PSI) *Proof: 621 Bar (9000 PSI) *Burst: 1035 Bar (15,000 PSI) *Applicable to pressure and cylinder ports only Note: Installation of this valve should ensure that exhaust port pressure does not exceed cylinder port pressures by more than 3.5 Bar (50 PSI) and never exceed 69 Bar (1000 PSI)
Flow	37.9 LPM (10 GPM) rated maximum
Operating Time	25 milliseconds
CV Factor	1.0
Internal Leakage	8 DPM Max. at 276 Bar (4000 PSI)
Mounting	Subplate. Mounting bolts furnished
Material	Cover: Steel Body: Steel Bottom Plate: Steel Inserts: Steel Washers: Steel Locknut: Steel Spring Retainer: Steel Screws: Steel Retainer Plate: Steel Name Plate Housing: Aluminum alloy, anodized End Cap: Aluminum alloy, anodized Slide: Stainless Steel Seals: Stainless Steel Springs: Stainless Steel O-rings: Synthetic rubber
Operating Temperature	-40°C to +107°C (-40°F to +225°F) (with Code 02 O-rings)

3000-B1.p65, dd

Parker Hannifin Corporation
Hydraulic Valve Division
Elyria, Ohio, USA

Ordering Information

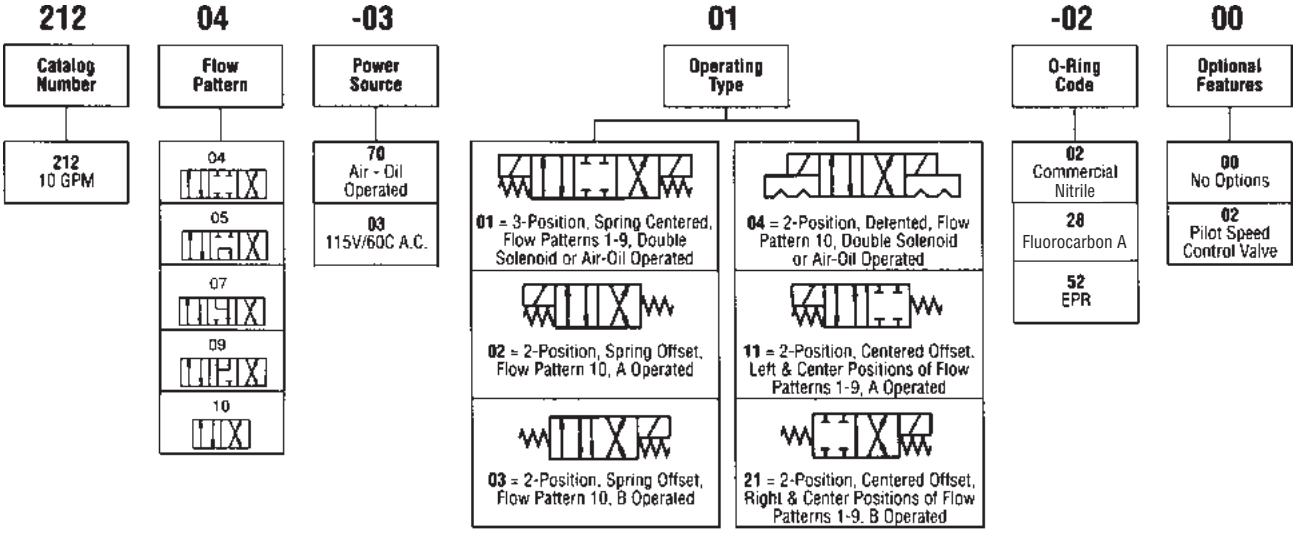

Note:
Do not use these valves in series or tandem circuits.

Dimensions

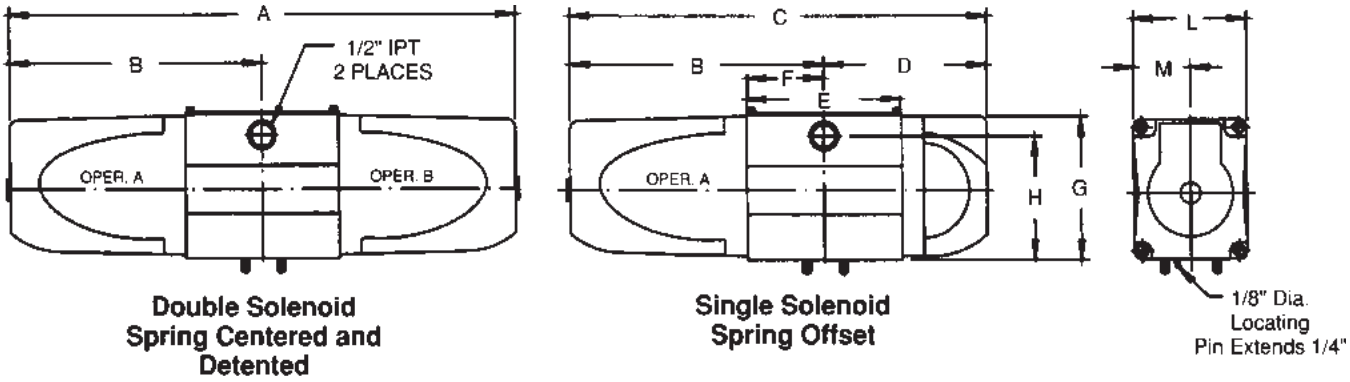

Double Solenoid Spring Centered and Detented

Single Solenoid Spring Offset

Power Source	Operating Type		All Dimensions are in Inches										Mounting Bolt Torque
			A	B	C	D	E	F	G	H	L	M	
Double Solenoid A.C.	01 04	3-Position Spring Centered 2-Position Detented	$15\frac{13}{16}$	$7\frac{29}{32}$	—	—	$4\frac{13}{16}$	$2\frac{13}{32}$	$4\frac{7}{16}$	$3\frac{3}{4}$	$3\frac{1}{2}$	$1\frac{3}{4}$	160 to 180 Inch Lbs.
Single Solenoid A.C.	02+03 11+21	2-Position Spring Offset 2-Position Centered Offset	—	$7\frac{29}{32}$	$13\frac{31}{32}$	$5\frac{1}{8}$	$4\frac{13}{16}$	$2\frac{13}{32}$	$4\frac{7}{16}$	$3\frac{3}{4}$	$3\frac{1}{2}$	$1\frac{3}{4}$	
Pneu. or Hyd. Double Operator	01 04	3-Position Spring Centered 2-Position Detented	$12\frac{1}{16}$	$6\frac{1}{32}$	—	—	$4\frac{13}{16}$	$2\frac{13}{32}$	$4\frac{7}{16}$	$3\frac{3}{4}$	$3\frac{1}{2}$	$1\frac{3}{4}$	160 to 180 Inch Lbs.
Pneu. or Hyd. Single Operator	02+03 11+21	2-Position Spring Offset 2-Position Centered Offset	—	$6\frac{1}{32}$	$11\frac{5}{32}$	$5\frac{1}{8}$	$4\frac{13}{16}$	$2\frac{13}{32}$	$4\frac{7}{16}$	$3\frac{3}{4}$	$3\frac{1}{2}$	$1\frac{3}{4}$	

Note: Pneumatic and hydraulic operators, operating pressure is 20 to 150 PSI.

B

General Description

Series 25100 and 25200 Exectrol directional control valves are solenoid controlled, pilot operated 4-way control valves. A slide and balanced seals are used which provides near zero leakage. The valves have a high tolerance to media contamination as each movement of the slide wipes the sealing surfaces clean which in turn results in long service life.

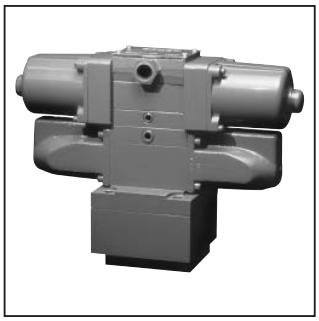

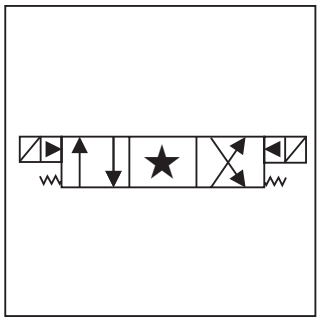

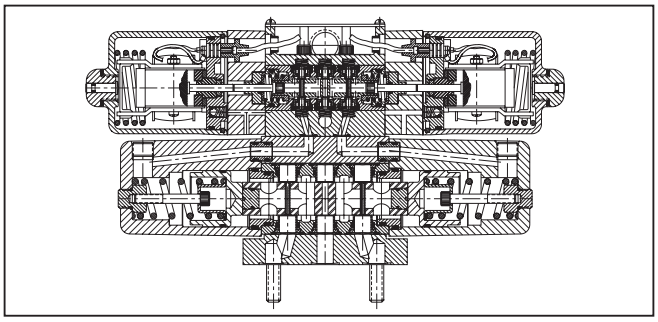

Features

- Shear-type positive seal.
- Zero leakage (8 drops per min. maximum).
- Ideal for water soluble systems (95-5).
- Pressures up to 414 Bar (6000 PSI).
- Long life, easy maintenance.
- Standard valves are interflow.
- No packing to wear or cut.
- High tolerance to contamination.
- High tolerance to silting.
- Manual overides are standard.

Valve Series	Flow GPM	CV Factor	Pilot Valve Series	Weight Including Sequence Valve (Lbs.)
25100	25 Max.	2.5	21100 (3 GPM)	30 to 32
25200	45 Max.	4.3	21100 (3 GPM)	40 to 42.5

Specifications

Service Applications	Hydraulic oil. Water containing minimum of 5% soluble oil. Suggest water soluble oil with a sodium sulphonate-based emulsifier. Oil should have a viscosity of 250-350 SSU at 38°C (100°F). Others available on special order.
Maximum Operating Pressure	Pilot: 10.4 to 414 Bar (150 to 6000 PSI) Working: 414 Bar (6000 PSI) *Proof: 621 Bar (9000 PSI) *Burst: 1035 Bar (15,000 PSI) *Applicable to pressure and cylinder ports only Note: Installation of this valve should ensure that exhaust port pressure does not exceed cylinder port pressures by more than 3.5 Bar (50 PSI) and never exceed 69 Bar (1000 PSI)
Flow	25100: 94.6 LPM (25 GPM) 25200: 107.3 LPM (45 GPM)
Internal Leakage	8 drops per min. maximum
Mounting	Subplate. Mounting bolts furnished
Material	Cover, Body, Bottom Plate, Inserts, Washers, Spring Retainer, Screws, Retainer Plate, Sealing Ring Pistons Main End Caps: Steel Name Plate, Pilot End Cap, Pilot Retainer Plate: Aluminum alloy Slide, Seals, Springs, Pilot Choke Plug: Stainless Steel O-rings: Synthetic rubber
Operating Temperature	-40°C to +107°C (-40°F to +225°F) (with Code 02 O-rings)

3000-B1.p65, dd

Parker Hannifin Corporation
Hydraulic Valve Division
Elyria, Ohio, USA

251 — Catalog Number

- **251** 25 GPM Main Valve 3 GPM Pilot Valve
- **252** 45 GPM Main Valve 3 GPM Pilot Valve

04 — Flow Pattern

- **04**
- **05**
- **07**
- **10**

-73 — Power Source

- **70** Air - Oil Operated
- **73** 115V/60C A.C.

02 — Operating Type

- * **01** = 3-Position, Spring Centered, Flow Patterns 1-8, Double Solenoid or Air-Oil Operated
- **02** = 2-Position, Spring Offset, Flow Pattern 10, Solenoid A Operated
- **03** = 2-Position, Spring Offset, Flow Pattern 10, Solenoid B Operated
- **04** = 2-Position, Detented, Flow Pattern 10, Double Solenoid or Air-Oil Operated
- **09** = 3-Position Pressure Centered Flow Patterns 1-8, Double Solenoid or Air-oil Operated

-02 — O-Ring Code

- **02** Commercial Nitrile
- **28** Fluorocarbon A

01 — Optional Features

- **00** No Options
- **01** Sequence Valve
- **02** Pilot Speed Control Valve
- **03** External Drain
- **04** Sequence Valve Pilot Speed Control Valve
- **05** Sequence Valve External Drain
- **06** Pilot Speed Control Valve External Drain
- **07** Sequence Valve Pilot Speed Control Valve External Drain

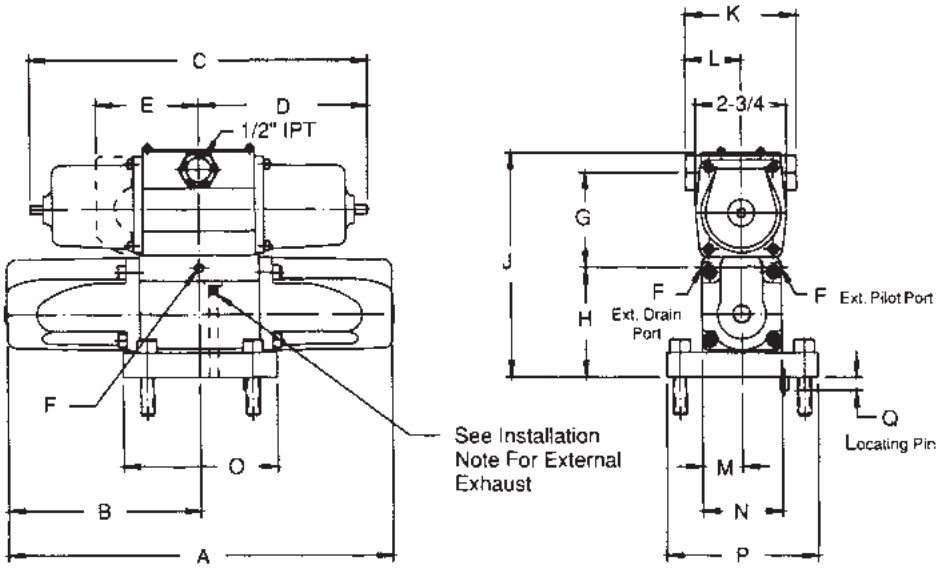

Valve Series	Power Source	All Dimensions are in Inches																		
		A	B	C	D	E	F	G	H	J	K	L	M	N	O	P	Q	Mounting Torque	S	T
25100	A.C.	$10\frac{31}{32}$	$5\frac{31}{64}$	$12\frac{3}{4}$	$6\frac{3}{8}$	$2\frac{15}{16}$	$\frac{1}{4}$	$2\frac{51}{64}$	$3\frac{1}{16}$	$6\frac{13}{32}$	$3\frac{1}{8}$	$1\frac{9}{16}$	$1\frac{1}{8}$	$2\frac{1}{4}$	$4\frac{3}{8}$	$4\frac{1}{4}$	1/4 Dia. X 3/8 Proj.	700 In. Lbs.	.812	$1\frac{5}{8}$
	D.C.			$14\frac{15}{16}$	$7\frac{15}{32}$															
	Air Oper.			$9\frac{9}{16}$	$4\frac{9}{32}$			—												
25200	A.C.	$13\frac{1}{4}$	$6\frac{5}{8}$	$12\frac{3}{4}$	$6\frac{3}{8}$	$2\frac{15}{16}$	$\frac{1}{4}$	$2\frac{51}{64}$	$3\frac{17}{64}$	$6\frac{3}{4}$	$3\frac{1}{8}$	$1\frac{9}{16}$	$1\frac{3}{8}$	$2\frac{3}{4}$	$4\frac{3}{8}$	$4\frac{1}{4}$	1/4 Dia. X 3/8 Proj.	700 In. Lbs.	1.000	$2\frac{1}{8}$
	D.C.			$14\frac{15}{16}$	$7\frac{15}{32}$															
	Air Oper.			$9\frac{9}{16}$	$4\frac{9}{32}$			—												

Minimum operating pilot pressure is 150 PSI.

Internal Piloting:
A sequence valve must be used to provide upstream minimum pilot pressure when using a single pressure source for both the slave and pilot valves.

External Piloting:
(No sequence valve used.) Minimum pilot pressure (150 PSI above exhaust pressure) must be supplied to the external pilot port of the pilot valve.

External exhaust for the pilot valve requires the use of part number 02050-2700-0000 installed as follows (see page 6-9 valve drawing):
1. Remove pilot valve.
2. Remove slave valve pilot cover.
3. Insert plug assembly into internal drain orifice.
4. Re-assemble valve and connect external drain at "F".

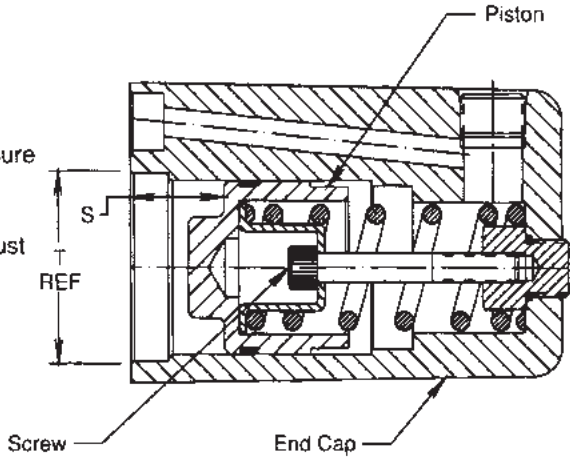

When reassembling spring centering end cap, maintain "S" dimension.

Note:
External drain should be used when pilot media is different from primary media.

General Description

Series 21353 and 21356 Exectrol directional control valves are solenoid operated and can serve as a dump valve or a shut-off valve depending upon the configuration ordered. The valves handle grease and oil interchangeably without modification. The valves have a high tolerance to media contamination.

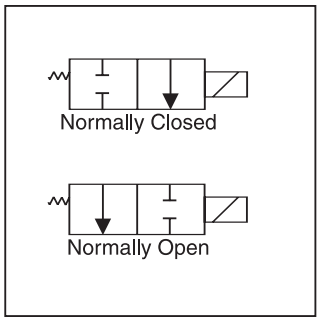

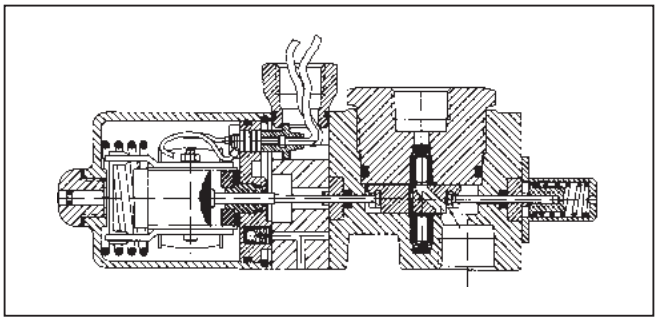

Features

- Designed to handle grease and oil in centralized lubricating systems.
- Self cleaning and dirt resistant.
- Shear-type positive seal.
- Recommended for "venting" an R6701 relief valve as a high pressure shut-off or dump valve.

Specifications

Service App.	Lubricating grease or oil.
Maximum Operating Pressure	Working: 310.5 Bar (4500 PSI) Proof: 465.8 Bar (6750 PSI) Burst: 776.3 Bar (11,250 PSI)
Sizes	NPT 3/8", 3/4"
Orifice Dia.	3/16"
Ports	NPT Pipe Threads
CV Factor	0.7
Internal Leakage	1 DPM maximum per pressurized port
Mounting	In-line. (ports offset)
Material	Body, Cap, Solenoid Housing & Cap: Aluminum alloy, anodized Slide, Seals: Stainless steel, type 440 Springs: Stainless steel O-rings: Synthetic rubber Back-up Rings: PTFE
Operating Temperature	-40°C to +107°C (-40°F to +225°F) (with Code 02 O-rings)

Dimensions

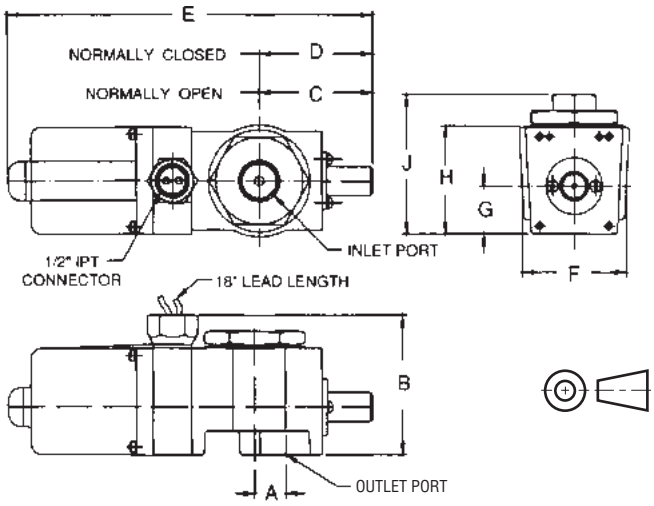

Power Source	All Dimensions are in Inches								
	A	B	C	D	E	F	G	H	J
A.C. Solenoid	$\frac{13}{16}$	$3\frac{1}{2}$	$3\frac{1}{16}$	$2\frac{15}{16}$	$9\frac{7}{16}$	$2\frac{29}{32}$	$1\frac{15}{64}$	$2\frac{51}{64}$	$3\frac{3}{16}$
D.C. Solenoid	$\frac{13}{16}$	$3\frac{1}{2}$	$3\frac{1}{16}$	$2\frac{15}{16}$	11	$2\frac{29}{32}$	$1\frac{15}{64}$	$2\frac{51}{64}$	$3\frac{3}{16}$
Air - Oil Operator	$\frac{13}{16}$	$3\frac{1}{2}$	$3\frac{1}{16}$	$2\frac{15}{16}$	$8\frac{13}{16}$	$2\frac{29}{32}$	$1\frac{15}{64}$	$2\frac{51}{64}$	$3\frac{3}{16}$

Ordering Information

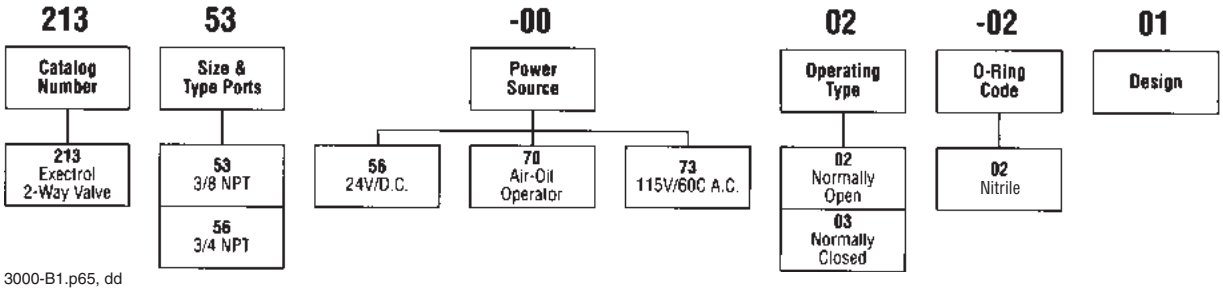

3000-B1.p65, dd

Parker Hannifin Corporation
Hydraulic Valve Division
Elyria, Ohio, USA

B

General Description

Series 23100, 23200, and 23300 Exectrol directional control valves are pilot operated 4-way control valves. A slide and balanced seals are used which provides near zero leakage. The valves have a high tolerance to media contamination as each movement of the slide wipes the sealing surfaces clean which in turn results in long service life.

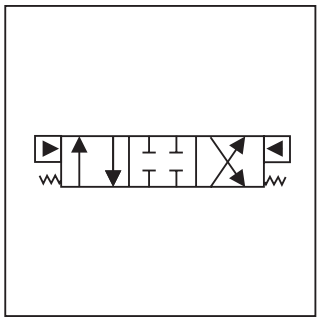

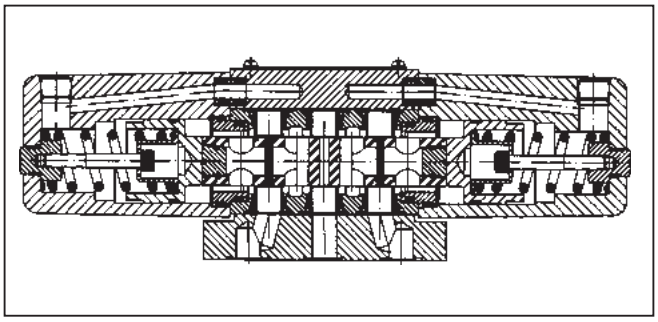

Features

- Shear-type positive seal.
- Zero leakage (8 drops per min. maximum).
- Ideal for water soluble systems (95-5).
- Pressures up to 414 Bar (6000 PSI).
- Long life, easy maintenance.
- Standard valves are interflow.
- No packing to wear or cut.
- High tolerance to contamination.
- High tolerance to silting.
- Mounts in any position.

Specifications

Service Applications	Hydraulic oil. Water containing minimum of 5% soluble oil. Others available on special order.
Maximum Operating Pressure	*Pilot: 10.4 to 414 Bar (150 to 6000 PSI) Working: 414 Bar (6000 PSI) †Proof: 621 Bar (9000 PSI) †Burst: 1035 Bar (15,000 PSI) † Applicable to pressure and cylinder ports only. * Pilot pressure must exceed exhaust port pressure by at least 10.4 Bar (150 PSI) Note: Installation of this valve should ensure that exhaust port pressure does not exceed cylinder port pressures by more than 3.5 Bar (50 PSI). For spring centered valves, exhaust port pressure not to exceed 3.5 Bar (50 PSI).
Flow	23100: 94.6 LPM (25 GPM) 23200: 170.3 LPM (45 FPM) 23300 283.9 LPM (75 GPM)
Internal Leakage	8 drops per min. maximum
External Leakage	Zero
Mounting	Subplate. Mounting bolts furnished.
Material	Body, Pistons Spring Retainer, Pipe Plugs: Steel End Caps: Ductile iron Slide, Seals, Springs, Spring Washers: Stainless Steel O-rings: Synthetic rubber Back-up Rings: PTFE
Operating Temperature	-40°C to +121°C (-40°F to +250°F) (with Code 02 O-rings)

Valve Number	Weight	CV Factor	Rated Flow	4 Flow Holes	Pilot Pistons 1/2 Stroke	Displacement Full Stroke	Pilot Port Sizes
23100	14 Lbs.	2.5	25 GPM	7/16 Dia.	.9 Cu. In.	1.8 Cu. In.	1/4 NPT
23200	23 Lbs.	4.3	45 GPM	9/16 Dia.	2.2 Cu. In.	4.4 Cu. In.	1/4 NPT
23300	54 Lbs.	7.4	75 GPM	3/4 Dia.	5.2 Cu. In.	10.4 Cu. In.	3/8 NPT

Ordering Information

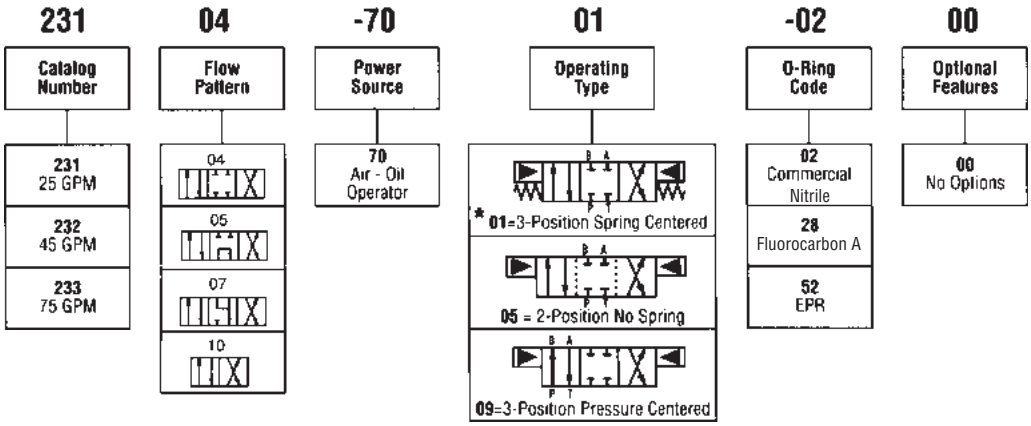

Dimensions

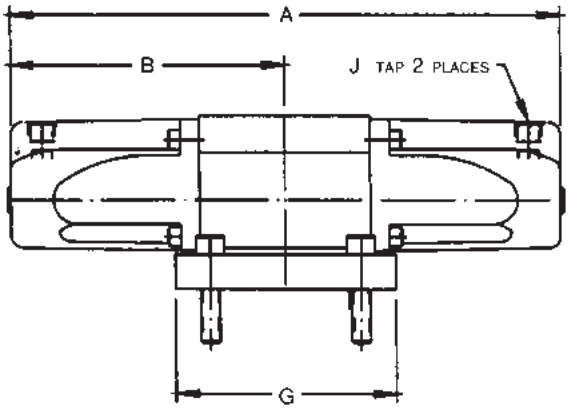

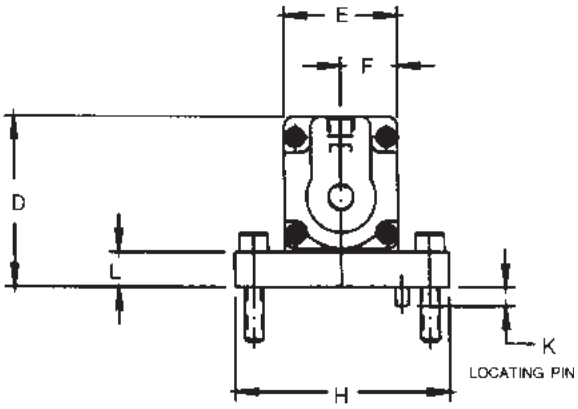

Valve Series	All Dimensions are in Inches											Mounting Torque Required
	A	B	C	D	E	F	G	H	J	K	L	
23100	$10\frac{31}{32}$	$5\frac{31}{64}$	$\frac{5}{8}$	$3\frac{27}{64}$	$2\frac{1}{4}$	$1\frac{1}{8}$	$4\frac{3}{8}$	$4\frac{1}{4}$	$\frac{1}{4}$ NPT	$\frac{1}{4}$ Dia. x $\frac{3}{8}$ Proj.	$\frac{11}{16}$	700 In. Lbs.
23200	$13\frac{1}{2}$	$6\frac{3}{4}$	$\frac{7}{8}$	$3\frac{3}{4}$	$2\frac{3}{4}$	$1\frac{3}{8}$						
23300	$16\frac{1}{4}$	$8\frac{1}{8}$	1	$4\frac{23}{32}$	$4\frac{1}{4}$	$2\frac{1}{8}$	$5\frac{1}{2}$	$6\frac{1}{4}$	$\frac{3}{8}$ NPT	$\frac{3}{8}$ Dia. x $\frac{1}{2}$ Proj.	$1\frac{1}{8}$	1100 In. Lbs.

B

General Description

Series 21400 Exectrol directional control valves are in-line mounted, solenoid operated control valves. A slide and balanced seals are used which provides near zero leakage. The valves have a high tolerance to media contamination as each movement of the slide wipes the sealing surfaces clean which in turn results in long service life.

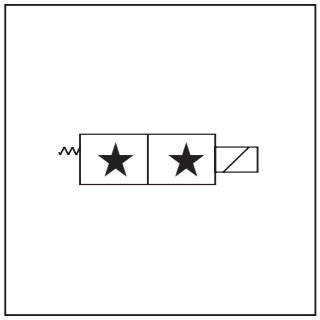

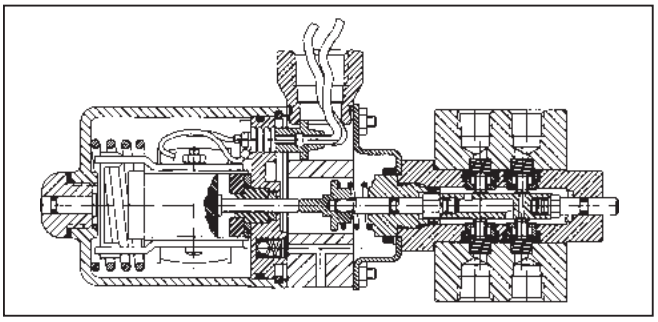

Features

- Zero leakage (1 drop per min. per pressure port).
- Available two-position operating types are: 2-way normally open; 2-way normally closed; 3-way and 4-way.
- Standard valves are interflow.
- Shear-type positive seal.

A.C. Electrical Data	
Inrush Current	4.2 Amps Maximum
Holding Current	.85 Amps Maximum
Drop-Out Voltage	Approx. 75% Rated Voltage
Voltage Required to Pull Back After Drop-Out	Approx. 95% Rated Voltage

Specifications

Service App.	Lubricated air and hydraulic oil
Maximum Operating Pressure	Working - Air: 69.0 Bar (1000 PSI) Oil: 414.0 Bar (6000 PSI) Proof: Air: 138.0 Bar (2000 PSI) Oil: 621.0 Bar (9000 PSI) Burst: Air: 172.5 Bar (2500 PSI) Oil: 1035.0 Bar (15,000 PSI)
Maximum Outlet Port Back Pressure	103.5 Bar (1500 PSI)
Maximum Flow Capacity	11.4 LPM (3 GPM)
Operating Time	25 milliseconds
Sizes	NPT 1/48", 3/8" (except 4-way)
Ports	NPT Pipe Threads AND10053
CV Factor	0.28
Internal Leakage	Maximum at rated pressure: Oil - 1 DPM maximum per pressurized port Air - 15 bubbles/min
Mounting	In-line
Material	Body: Aluminum alloy, anodized Slide, Seals: Stainless steel, type 440 O-rings: Synthetic rubber Back-up Rings: PTFE
Operating Temperature	-54°C to +71°C (-65°F to +160°F) Higher on special order.
Ambient Temperature	43°C (110°F) maximum recommended

Ordering Information

214	52	-00	02	-02	00
Catalog Number	Size & Type Ports	Power Source	Operating Type	O-Ring Code	Service
214 Direct-Acting Solenoid Valve	52 1/4 NPT	56 24V/D.C.	02 = 2-Way, Normally Open	02 Commercial Buna N	00 Hydraulic
	53 3/8 NPT 2-Way Only	70 Hydraulic Or Air Pilot Operated	03 = 2-Way, Normally Closed	28 Nitrile	01 Air
		73 115V/60C A.C.	14 = 3-Way, Normally Closed	52 Fluorocarbon A	
			19 = 3-Way, Normally Open		
			05 = 4-Way, 2 Position		

Dimensions

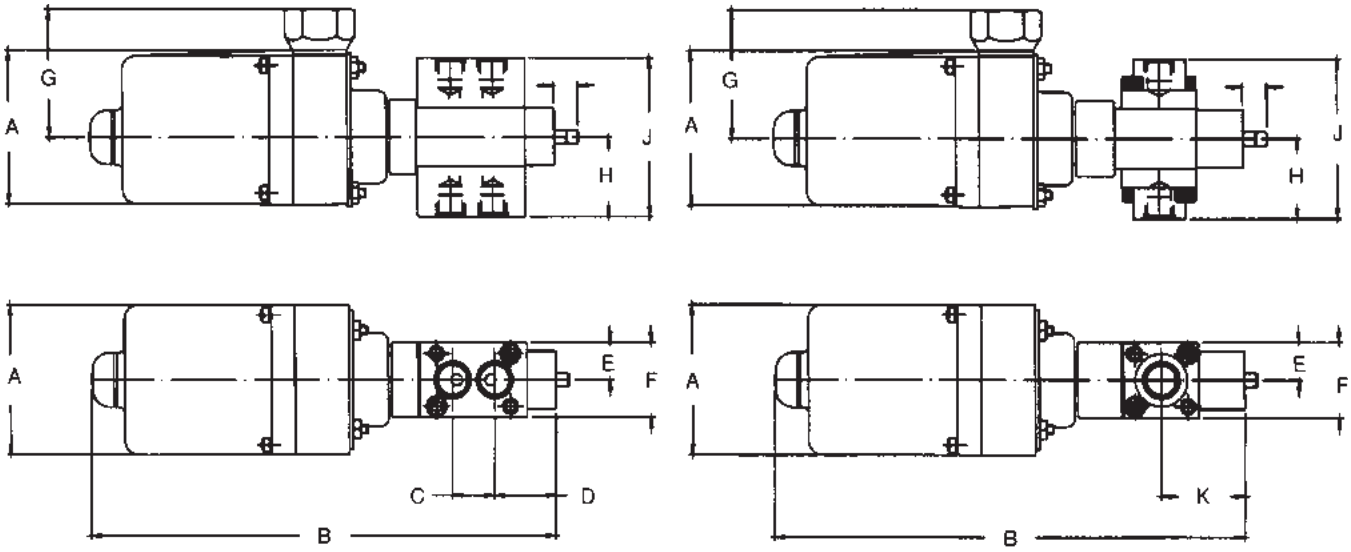

Valve Operator	All Dimensions are in Inches									
	A	B	C	D	E	F	G	H	J	K
A.C. Solenoid	$2\frac{3}{4}$	$8\frac{7}{16}$	$\frac{25}{32}$	$1\frac{5}{32}$	$\frac{11}{16}$	$1\frac{3}{8}$	$2\frac{3}{8}$	$1\frac{29}{64}$	$2\frac{29}{32}$	$1\frac{17}{32}$
D.C. Solenoid	$2\frac{3}{4}$	$10\frac{1}{8}$	$\frac{25}{32}$	$1\frac{5}{32}$	$\frac{11}{16}$	$1\frac{3}{8}$	$2\frac{3}{8}$	$1\frac{29}{64}$	$2\frac{29}{32}$	$1\frac{17}{32}$
Air - Oil Operator	$2\frac{3}{4}$	$6\frac{13}{16}$	$\frac{25}{32}$	$1\frac{5}{32}$	$\frac{11}{16}$	$1\frac{3}{8}$	—	$1\frac{29}{64}$	$2\frac{29}{32}$	$1\frac{17}{32}$

3000-B1.p65, dd

Parker Hannifin Corporation
Hydraulic Valve Division
Elyria, Ohio, USA

B

General Description

Series 961, 962, 963, and 965 valves serve as dump valves or shut-off valves depending upon the configuration ordered. These valves fit the need for fast remote opening and closing and can be found in fast remote unloading circuits.

Features

- Designed for fast remote unloading and closing.
- High pressure, high flow valves for hydraulic service.
- Pilot-operated for fast, smooth, non-shock operation.

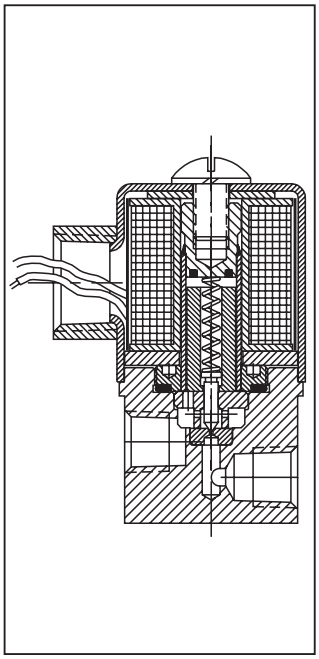

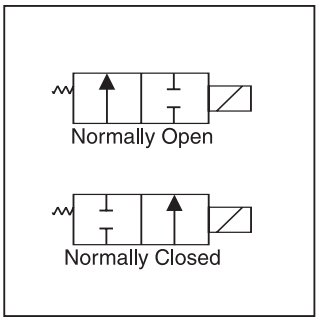

Reference

Valve Number	Normal Position	Maximum Working Pressure	Pilot Orifice	Piston Orifice
Aluminum Alloy				
961-A3/8D2	Closed	1500 PSI	.040	.032
961-A3/4D2	Closed	1500 PSI		
962-A3/8D2	Closed	3000 PSI	.030	.024
962-A3/4D2	Closed	3000 PSI		
963-A3/8D2	Closed	5000 PSI	.024	.020
963-A3/4D2	Closed	5000 PSI		
965-A3/8D2	Open	3000 PSI	.028	.024
965-A3/4D2	Open	3000 PSI		
Steel				
961-A11/2S2	Closed	1500 PSI	.040	.032
962-A11/2S2	Closed	3000 PSI	.030	.024
963-A11/2S2	Closed	5000 PSI	.024	.020
965-A11/2S2	Open	3000 PSI	.028	.024

Valve Size	CV Factor	Flows GPM Rec. Max.	Operating Time at Max. Flow: Opening	Operating Time at Max. Flow: Closing	Weight
3/8	1.9	7.5	25 Milliseconds	0.7 Sec.	1 Lbs. 8 Oz.
3/4	4.0	20.0		1.0 Sec.	3 Lbs.
1 1/2	25.0	90.0		2.0 Sec.	18 Lbs.

Valve Size	Valve Number	CV Factors	Orifice Size	Weight
1/4	961	.032	.040	1.2 Lbs.
	962	.022	.030	
	963	.014	.024	
	965	.013	.028	

Electrical Data

Service Code	Service	Power Consumption Watts Maximum	Current Drain: Inrush Amps.	Current Drain: Holding Amps.
A	115V 60Cy AC	16.5	.450	.300
E	*24V DC	6.0	—	.326

*Not available for 5000 PSI valves.
HEAT RISE: 80° C. Continuous Service

Specifications

Service App.	Hydraulic oil
Maximum Operating Pressure	Working: Minimum - 1.7 Bar (25 PSI) Maximum - See availability list Proof: 1 1/2 times operating pressure
Sizes	NPT 1/4", 3/8", 3/4", 1 1/2"
Ports	NPT Pipe Threads
Internal Leakage	1 cc/min.
Mounting	Bolted - see drawing for dimensions Install with Solenoid Up
Material	Body: 1/4", 3/8", 3/4" - Aluminum alloy; 1 1/2" - Steel Spring: Stainless steel, AMS5688 Piston: Steel Seat, Solenoid Valve: Brass Seat 1 1/2" Valve Piston: Stainless steel O-rings: Synthetic rubber Back-up Rings: PTFE
Coil Lead Length	24"
Operating Temperature	-40°C to +107°C (-40°F to +225°F) (with Code 02 O-rings)
Electric Service	See Electrical Data Table for other services

Note: Will not operate satisfactorily with reverse flow on exhaust port.

3000-B1.p65, dd

Parker Hannifin Corporation
Hydraulic Valve Division
Elyria, Ohio, USA

Ordering Information

961	-A	3/8	S	2
Catalog Number	Power Source	Size and Type Ports	Materials	O-Ring Code
961 1500 PSI Normally Closed	**A** 115V/60C A C.	1/4 NPT	**O** Aluminum Alloy	**2** Nitrile
962 3000 PSI Normally Closed	* **E** 24V/D.C.	3/8 NPT	**S** Steel (1-1/2 Only)	
965 3000 PSI Normally Open		3/4 NPT		
963 5000 PSI Normally Closed		1-1/2 NPT		

Note:
* Not available for 5000 PSI valves.

Construction Views

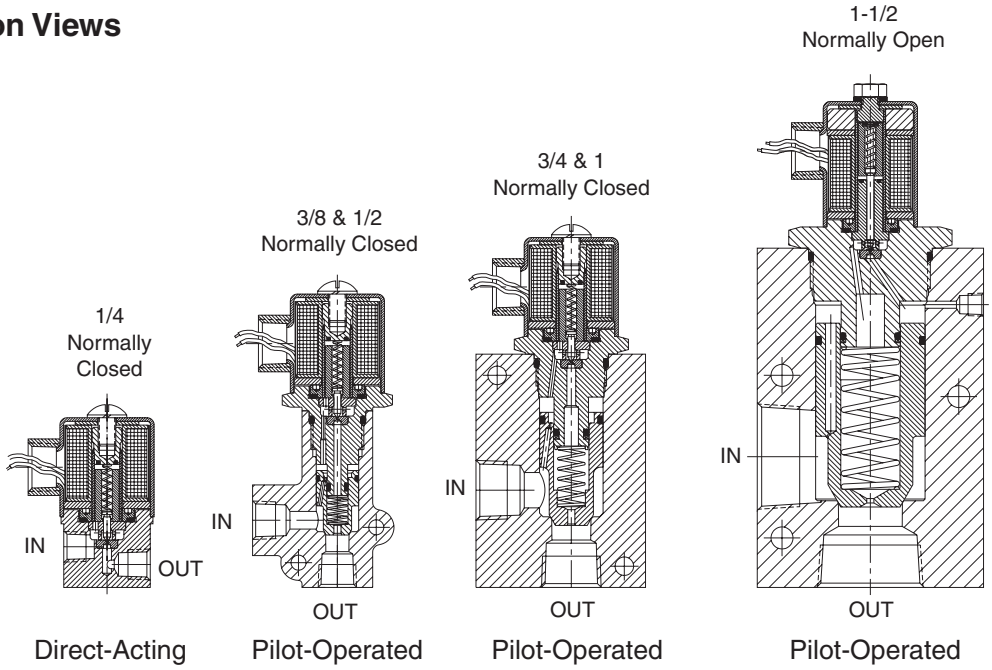

Solenoid Construction Views

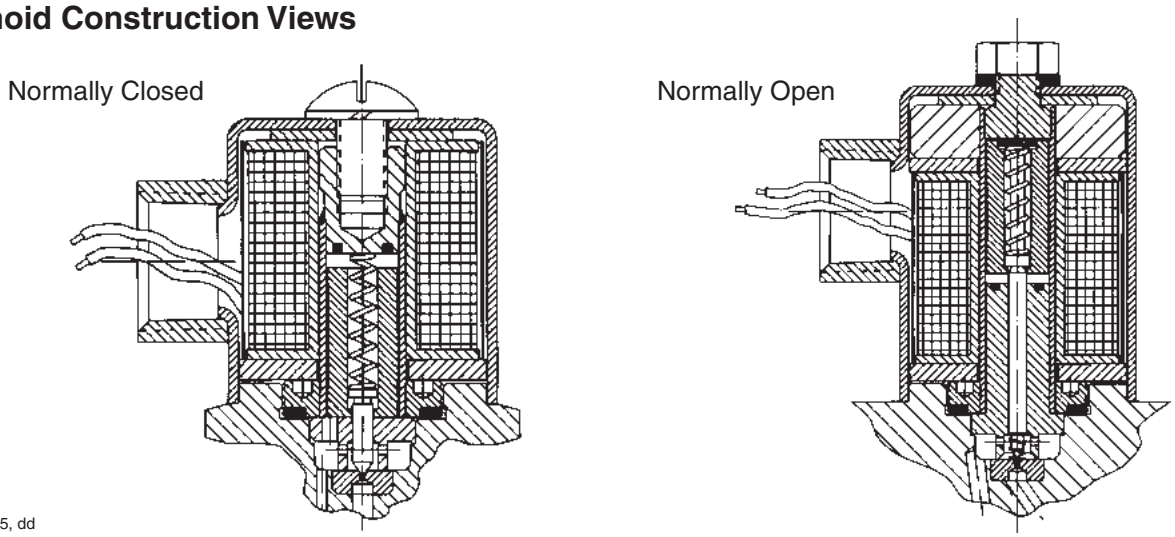

3000-B1.p65, dd

Parker Hannifin Corporation
Hydraulic Valve Division
Elyria, Ohio, USA

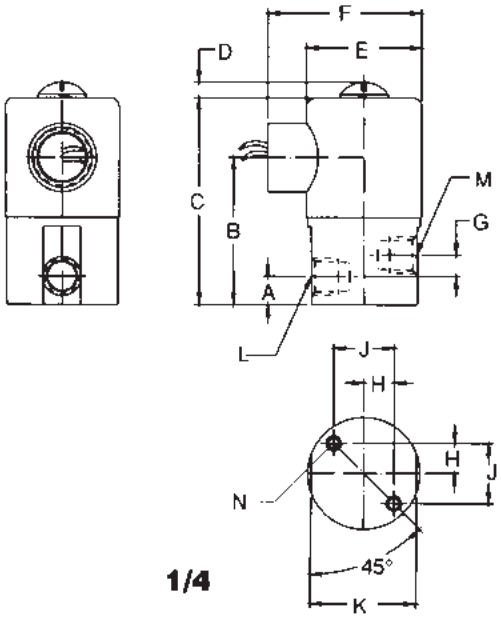

1/4

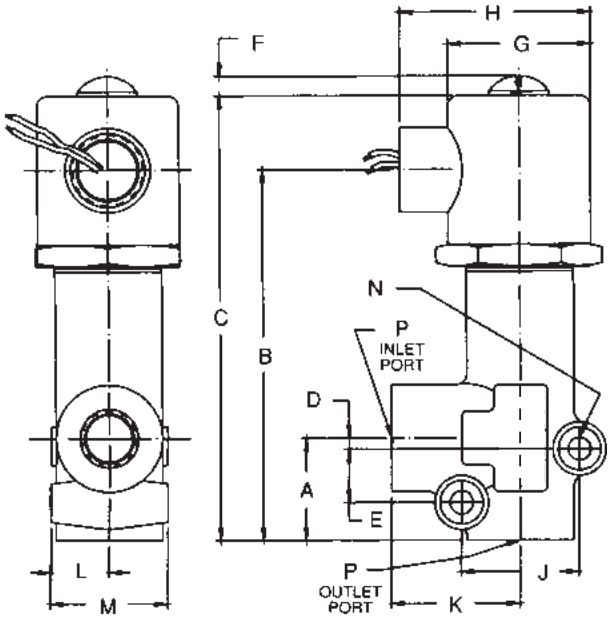

3/8 & 1/2

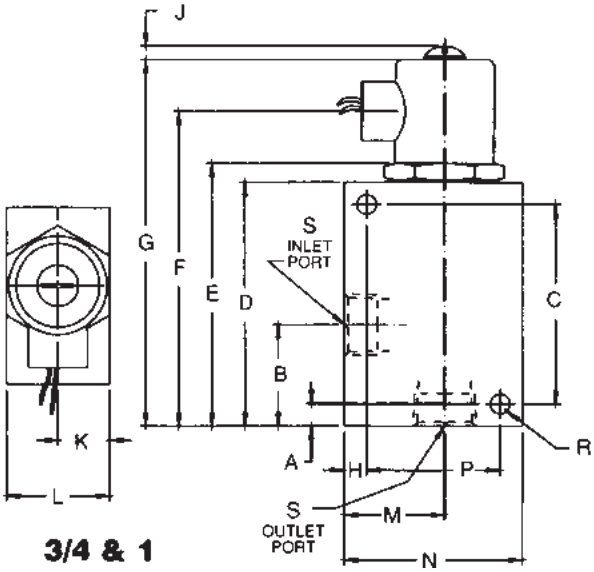

3/4 & 1

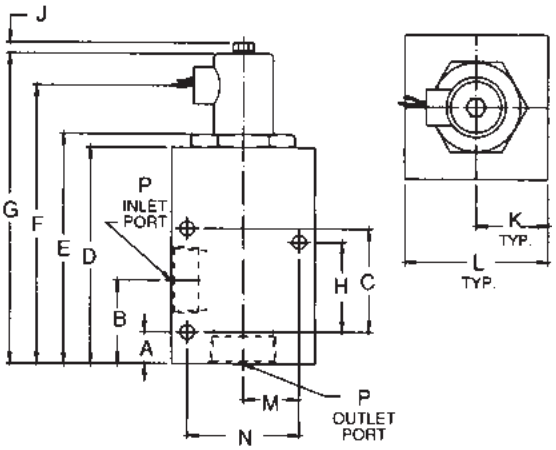

1-1/2

	Valve Size	All Dimensions are in Inches															
		A	B	C	D	E	F	G	H	J	K	L	M	N	P	R	S
Normally Closed	$\frac{1}{4}$	$\frac{13}{32}$	$2\frac{1}{16}$	$3\frac{1}{8}$	$\frac{1}{4}$	$1\frac{5}{8}$	$2\frac{7}{32}$	$\frac{9}{32}$	$\frac{7}{16}$	$\frac{7}{8}$	—	$\frac{1}{4}$ NPT	$\frac{1}{4}$ NPT	10-32 Thds	—	—	—
Normally Closed	$\frac{3}{8}$	$1\frac{3}{16}$	$2\frac{15}{16}$	4	$\frac{1}{8}$	.625	$\frac{1}{4}$	$1\frac{21}{32}$	$2\frac{7}{32}$	1.375	$1\frac{1}{2}$	$\frac{11}{16}$	$1\frac{3}{8}$	$\frac{17}{64}$ Dia.	$\frac{3}{8}$ NPT	—	—
Normally Closed	$\frac{1}{2}$	$1\frac{3}{16}$	$2\frac{15}{16}$	4	$\frac{1}{8}$	.625	$\frac{1}{4}$	$1\frac{21}{32}$	$2\frac{7}{32}$	1.375	$1\frac{1}{2}$	$\frac{11}{16}$	$1\frac{3}{8}$	$\frac{17}{64}$ Dia.	$\frac{1}{2}$ NPT	—	—
Normally Closed	$\frac{3}{4}$	$\frac{3}{8}$	$1\frac{23}{32}$	$3\frac{3}{8}$	$4\frac{1}{8}$	$4\frac{7}{16}$	$5\frac{1}{8}$	$6\frac{3}{16}$	$\frac{3}{8}$	$\frac{1}{4}$	$\frac{11}{16}$	$1\frac{3}{4}$	$1\frac{11}{16}$	3	$2\frac{1}{4}$	$\frac{21}{64}$ Dia.	$\frac{3}{4}$ NPT
Normally Closed	1	$\frac{5}{8}$	$1\frac{31}{32}$	$3\frac{3}{8}$	$4\frac{3}{8}$	$4\frac{11}{16}$	$5\frac{3}{8}$	$6\frac{7}{16}$	$\frac{5}{8}$	$\frac{1}{4}$	$\frac{11}{16}$	$1\frac{3}{4}$	$1\frac{15}{16}$	$3\frac{1}{4}$	$2\frac{1}{4}$	$\frac{21}{64}$ Dia.	1 NPT
Normally Closed	$1\frac{1}{2}$	$\frac{7}{8}$	$2\frac{5}{16}$	$2\frac{7}{8}$	6	$6\frac{3}{8}$	$7\frac{1}{16}$	$8\frac{1}{8}$	$2\frac{1}{2}$	$\frac{1}{4}$	2	4	$1\frac{9}{16}$	$3\frac{1}{8}$	$1\frac{1}{2}$ NPT	—	—

3000-B1.p65, dd

Parker Hannifin Corporation
Hydraulic Valve Division
Elyria, Ohio, USA

Return to ALPHA TOC
Return to SECTION TOC

In-Line Mounted Check Valves

Parker Hannifin Corporation
Hydraulic Valve Division
Elyria, Ohio, USA

C

General Description

Series AVF (Hydraulic) adjustable velocity fuses are designed to provide automatic hydraulic line rupture shut-off, as well as the ability to isolate a problem circuit on parallel circuit applications. Use of the fuses limits oil spillage and potential component damage. The fuses feature an adjustable flow for easy set-up and operation. A set screw in the body is provided to "lock in" the selected flow.

Features

- Provides automatic line rupture shut-off.
- Isolates problem circuit on parallel circuit applications.
- Limits oil spillage and potential component damage.
- Adjustable closing flow — simple readjustment.

Construction View

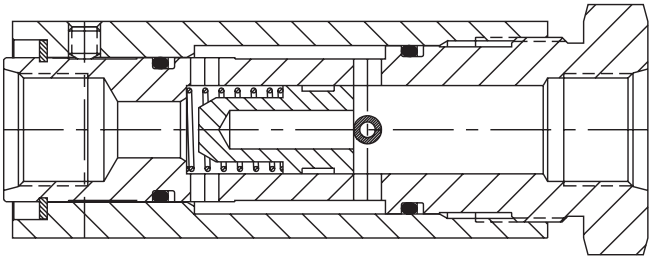

Specifications

Service Application	Hydraulic	
Maximum Operating Pressure	340 Bar (5000 PSI)	
Material	Body, Sleeve, Poppet, Roll Pin	Steel
	Spring	Stainless Steel
	O-ring	Fluorocarbon
	Back-up Ring	PTFE
	Finish	Zinc Plated
Operating Temperature	-27°C to +177°C (-20°F to +350°F)	
Mounting	Any	

Performance Data

Valve Size	Closing Flow Adjustment Range	
	Minimum	**Maximum**
1/4"	1.9 LPM (1/2 GPM)	15 LPM (4 GPM)
3/8"	3.8 LPM (1 GPM)	30 LPM (8 GPM)
1/2"	5.7 LPM (1-1/2 GPM)	45 LPM (12 GPM)
3/4"	7.6 LPM (2 GPM)	68 LPM (18 GPM)
1"	11 LPM (3 GPM)	102 LPM (27 GPM)
1-1/2"	23 LPM (6 GPM)	227 LPM (60 GPM)

Pressure drop at maximum rated flow is less than 100 PSID on all sizes.

Ordering Information

Nominal Size	Port Type	
	NPT P/N	**SAE P/N**
1/4"	AVF-1/4-S28	AVF-106-S28
3/8"	AVF-3/8-S28	AVF-108-S28
1/2"	AVF-1/2-S28	AVF-110-S28
3/4"	AVF-3/4-S28	AVF-112-S28
1"	AVF-1-S28	AVF-116-S28
1-1/2"	AVF-1 1/2-S28	AVF-124-S28

Operation

Series AVF adjustable velocity fuse is a normally open, in-line valve. Under normal conditions, a spring holds the fuse poppet off its seat.

Flow Path

Flow enters the fuse at the flanged inlet port (A). Before reaching the poppet, a series of radial holes (B) in the body directs flow from the body core into an annular cavity (C) between the body and the adjusting sleeve. Flow is directed axially between the body and sleeve until it reaches another series of radial holes (D) at the poppet seat. Flow is then directed back into the body core through the seat and out the fuse outlet port (E).

Making Adjustments

External adjustments of the sleeve reduce the “free” area of the radial holes (D). This reduction in area creates an increase in flow velocity, resulting in a higher pressure drop. When the pressure drop exceeds the spring force holding the poppet open, the inlet pressure will force the poppet against its seat, effectively closing the fuse.

Line Rupture Shut-Off

The sleeve can be adjusted such that, at normal flows, the fuse will remain open but increased flow rates (such as caused by downstream line rupture) will result in a rapid closing of the fuse. The fuse will remain closed until the inlet pressure is eliminated or the downstream pressure is equalized with the inlet.

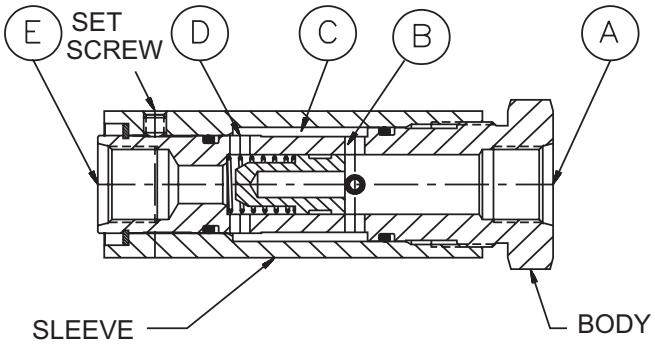

Dimensions

Inch equivalents for millimeter dimensions are shown in (**)

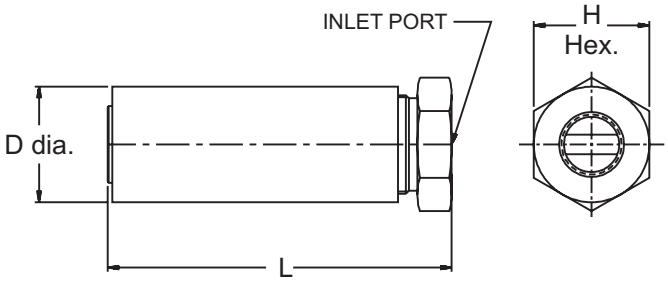

Nominal Size	L mm - (in)	D mm - (in)	H mm - (in)	Weight kg - (lbs.)
1/4"	90 (3.56)	29 (1.13)	29 (1.13)	0.36 (0.8)
3/8"	108 (4.25)	33 (1.31)	33 (1.31)	0.54 (1.2)
1/2"	128 (5.02)	43 (1.69)	43 (1.69)	1.1 (2.4)
3/4"	143 (5.62)	51 (2.0)	51 (2.0)	1.7 (3.8)
1"	168 (6.62)	61 (2.38)	61 (2.38)	2.8 (6.1)
1-1/2"	221 (8.69)	76 (3.0)	76 (3.0)	5.3 (11.6)

Conventional Fuse

- Closing flow must be calculated
- Calculation error results in unusable valve
- System changes make valve unusable
- “Matched” fuses are very expensive
- Special order to meet requirements

AVF Series Adjustable Velocity Fuse

- No calculations required
- Correct size always supplied
- Simple re-adjustment
- Minor adjustment only
- Stocked by pipe size

C

Pump/System Air Bleed

When starting a pump under load, the blocked port resists flow, and more torque is required from the prime mover. This condition may cause an electric motor to draw higher “pull-up current,” or may cause a combustion engine powered pump to stall. The velocity fuse is normally open and when tied into the tank, it will provide an open, load free path to tank when the pump first starts. As the pump nears operating speed, the resulting flow will cause the fuse to close, directing all flow into the primary circuit.

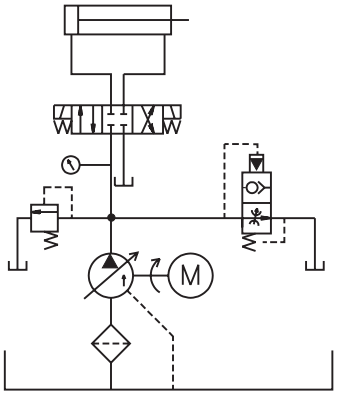

Main Pressure Line from Pump to Manifold

A line rupture in a central power unit would allow fluid to be pumped out through the broken line. The loss of oil can be expensive to clean up, dispose of, and replace; plus it must be done in accordance with EPA regulations. Ruptured lines may cause physical damage or the release of oil into a flammable area. A velocity fuse closes down flow when failure of a line occurs and eliminates these problems.

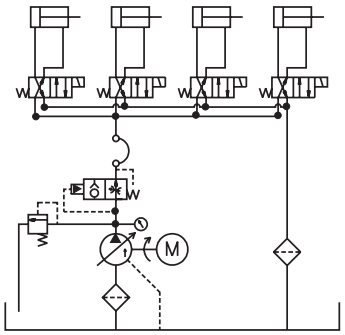

Cylinder/Actuator Shut-Off

A line rupture that occurs when a cylinder is supporting a load allows the load to fall unrestricted. A velocity fuse installed at the cylinder port will shut off flow and prevent the load from falling in the event of a hose or tubing failure.

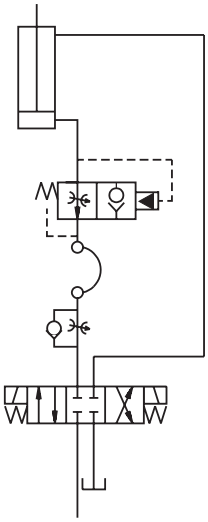

General Description

Series AVF (Pneumatic) adjustable velocity fuses are designed to provide automatic air line shut-off if a line should rupture or break. The use of fuses limits the possibility of personal injury or damage to equipment from whipping hoses. The fuses are field adjustable for easy setup and operation. A set screw in the body allows the selected setting to be locked.

Features

- Provides automatic line rupture shut-off.
- Limits runaway conditions.
- Eliminates hose whip.
- Air or water compatible.

Benefits

- Eliminates "line whip." No injury or damage possible.
- Limits runaway conditions. Load will stay in place after break.
- Precise sizing not required. Each valve has an adjustable flow range.
- Simple readjustments. Turn barrel to reset.
- Setting may be locked.
- Four sizes available.
- Resets quickly after line repair. Pressurize downstream line.

Specifications

Service Application	Pneumatic	
Maximum Operating Pressure	136 Bar (2000 PSI)	
Material	Body, Sleeve,	Brass
	Poppet, Roll Pin Spring	Stainless Steel
	O-ring	Nitrile
	Back-up Ring	PTFE
Operating Temperature	-27°C to +177°C (-20°F to +350°F)	
Mounting	Any	
Sizes	1/4", 3/8", 1/2" and 3/4" NPT	

Ordering Information

Series AVF Air Service	
Valve Size	**Part Number**
1/4" NPT	AVF-1/4-B2
3/8" NPT	AVF-3/8-B2
1/2" NPT	AVF-1/2-B2
3/4" NPT	AVF-3/4-B2

Performance Data

Valve Size	Series AVF Air Service Closing Flow Adjustment Range	
	Minimum	**Maximum**
1/4" NPT	5 SCFM	30 SCFM
3/8" NPT	5 SCFM	45 SCFM
1/2" NPT	10 SCFM	60 SCFM
3/4" NPT	10 SCFM	60 SCFM

Dimensions

Inch equivalents for millimeter dimensions are shown in (**)

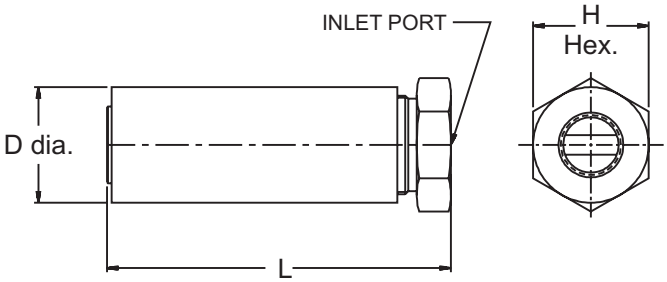

Nom. Size	L mm (Inches)	D mm (Inches)	H mm (Inches)	Weight kg (lbs.)
1/4"	90 (3.56)	29 (1.13)	29 (1.13)	0.36 (0.80)
3/8"	108 (4.25)	33 (1.31)	33 (1.31)	0.54 (1.20)
1/2"	128 (5.02)	43 (1.69)	43 (1.69)	1.10 (2.40)
3/4"	143 (5.62)	51 (2.00)	51 (2.00)	1.70 (3.80)

3000-C1.p65, dd

Parker Hannifin Corporation
Hydraulic Valve Division
Elyria, Ohio, USA

C

Operation

Series AVF adjustable velocity fuse is a normally open, in-line valve. Under normal conditions, a spring holds the fuse poppet off its seat.

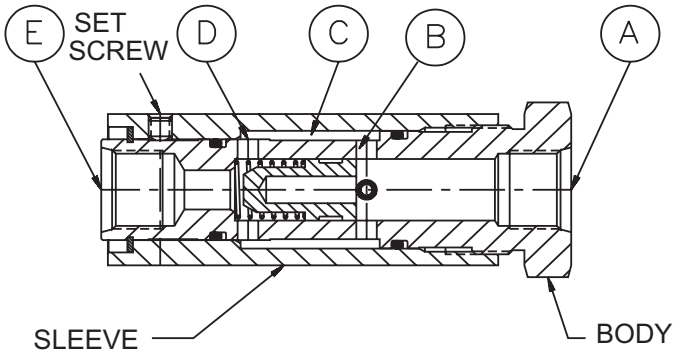

Flow Path

Flow enters the fuse at the flanged inlet port (A). Before reaching the poppet, a series of radial holes (B) in the body directs flow from the body core into an annular cavity (C) between the body and the adjusting sleeve. Flow is directed axially between the body and sleeve until it reaches another series of radial holes (D) at the poppet seat. Flow is then directed back into the body core through the seat and out the fuse outlet port (E).

Making Adjustments

External adjustments of the sleeve reduce the “free” area of the radial holes (D). This reduction in area creates an increase in flow velocity, resulting in a higher pressure drop. When the pressure drop exceeds the spring force holding the poppet open, the inlet pressure will force the poppet against its seat, effectively closing the fuse.

Line Rupture Shut-Off

The sleeve can be adjusted such that, at normal flows, the fuse will remain open but increased flow rates (such as caused by downstream line rupture) will result in a rapid closing of the fuse. The fuse will remain closed until the inlet pressure is eliminated or the downstream pressure is equalized with the inlet.

Applications

Air Line Drop

A broken air hose may cause a violent whipping action that could cause injury to employees or damage to equipment. A velocity fuse will provide an automatic shut-off of air in case of a broken hose and eliminate this problem.

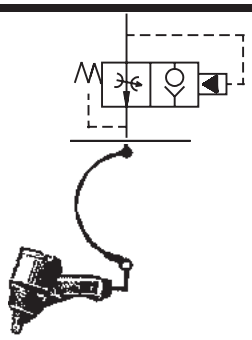

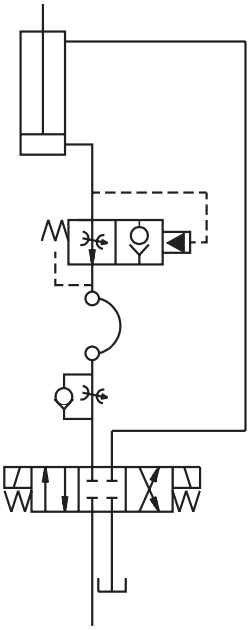

Cylinder / Actuator Shut-Off

A line rupture that occurs when a cylinder is supporting a load allows the load to fall unrestricted. A velocity fuse installed at the cylinder port will shut off flow and prevent the load from falling in the event of a hose or tube failure.

3000-C1.p65, dd

Parker Hannifin Corporation
Hydraulic Valve Division
Elyria, Ohio, USA

General Description

Series LT and LTF check valves will operate satisfactorily when installed in any position. These valves may be used as line check valves, permitting full flow of hydraulic oil in one direction only or they may be used as restrictors.

An assortment of restrictors are available. When installed, the valve becomes a line throttle valve permitting free flow of hydraulic oil in one direction and a restricted flow in the opposite direction.

An array of color-coded poppets allows easy and quick identification.

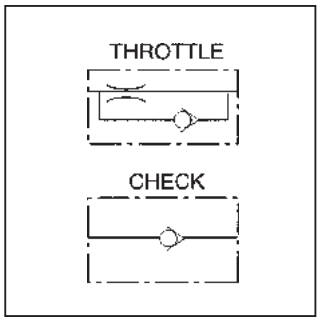

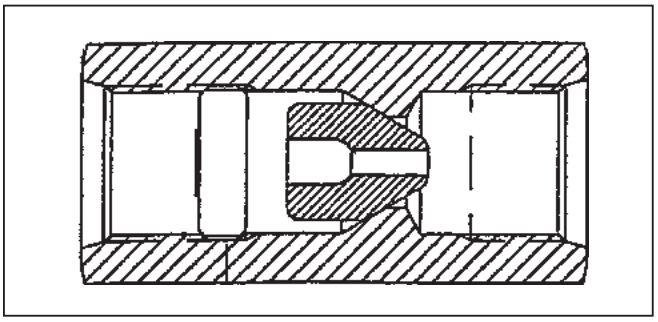

Features

- Accurate control of double-acting cylinder by having both sides of the piston pressurized.
- For improving control of the lowering stroke of a cylinder.
- For preventing cavitation of a cylinder or motor having an inertia load.
- For metering oil flow to a hydraulic motor for proper motor speed.
- For improving control of the extend stroke of a hydraulic cylinder.
- Unidirectional.

Specifications

Maximum Operating Pressure	207 Bar (3000 PSI)
Materials	Body: Steel/Zinc-plated Poppet: Nylon Retainer: 416 Stainless Steel
Operating Temperature	-30°C to +100°C (-22°F to +212°F)

Performance Curves

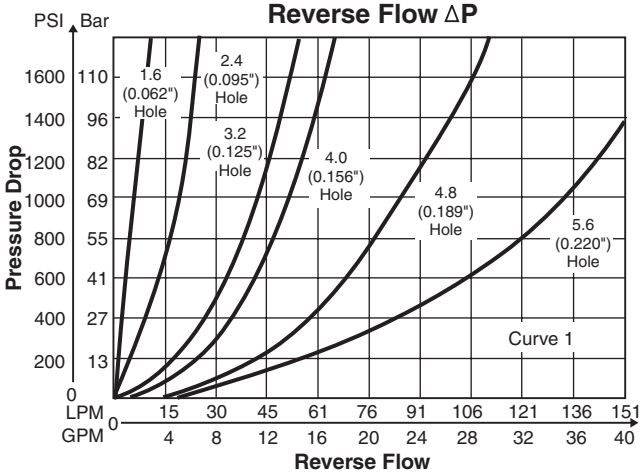

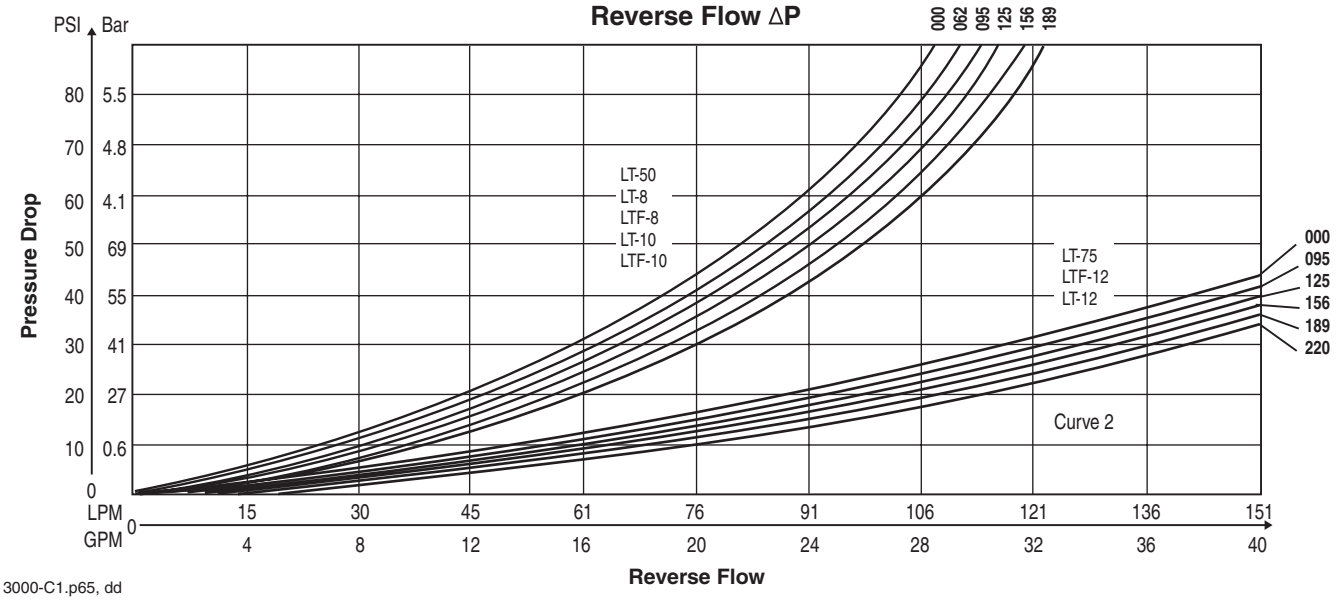

3000-C1.p65, dd

Parker Hannifin Corporation
Hydraulic Valve Division
Elyria, Ohio, USA

C

Ordering Information

Series — Port Size — Throttle and Check Poppets

Code	Series
LT	Male-Female Ports
LTF	Female-Female Ports

Code	Size
8	3/4" – 16 UNF-2
10	7/8" – 14 UNF-2
12	1 1/16" – 12 UNF-2
50	1/2" – 14 NPT (LT Only)
75	3/4" – 14 NPT (LT Only)

Poppet Order Symbol	Diameter of of Hole in Poppet		Poppet Color
For Part Numbers LT-8, LT-10, LT-50, LTF-8, LTF-10			
4	1.19	(.947)	Brown
6	1.57	(.062)	Purple
8	1.98	(.078)	Pink
9	2.41	(.095)	Red
11	2.77	(.109)	Beige
12	3.18	(.125)	Yellow
15	3.96	(.156)	Lt. Green
18	4.80	(.189)	Black
25	6.40	(.252)	Dk. Green
0	Check (No Hole)		Beige
For Part Numbers LT-12, LT-75, LTF-12			
180	4.80	(.189)	Black
210	5.59	(.220)	Orange
250	6.40	(.252)	Lt. Blue
00	Check (No Hole)		White

Dimensions

Inch equivalents for millimeter dimensions are shown in (**)

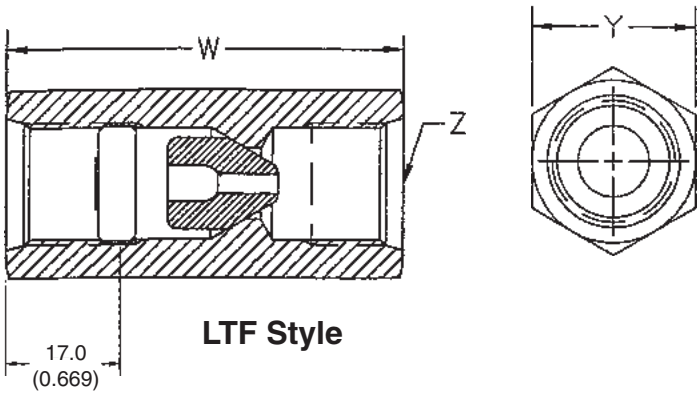

LTF Style

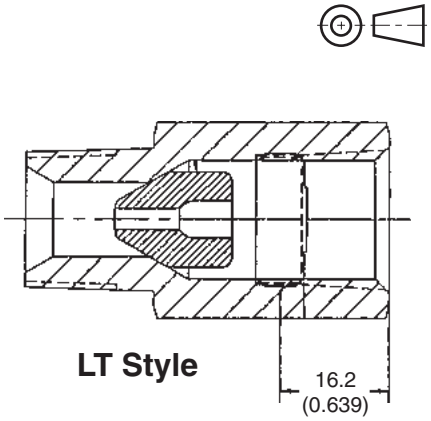

LT Style

Model Number	W Length	Y Hex Size	Z Thread (Both Ends)
LT-50	54.1 (2.13)	25.4 (1.00)	1/2" – 14 NPT
LT-8	54.1 (2.13)	25.4 (1.00)	SAE 8 (3/4" – 16 UNF)
LT-10	58.7 (2.31)	28.7 (1.13)	SAE 10 (7/8" – 14 UNF)
LT-12	77.7 (3.06)	35.1 (1.38)	SAE 12 (1 1/16" – 12 UN)
LT-75	73.2 (2.88)	35.1 (1.38)	3/4" – 14 NPT
LTF-8	62.0 (2.44)	25.4 (1.00)	SAE 8 (3/4" – 16 UNF)
LTF-10	68.3 (2.69)	28.7 (1.13)	SAE 10 (7/8" – 14 UNF)
LTF-12	82.6 (3.25)	35.1 (1.38)	SAE 12 (1 1/16" – 12 UN)

3000-C1.p65, dd

Parker Hannifin Corporation
Hydraulic Valve Division
Elyria, Ohio, USA

General Description

Series CLS inline check valves are designed to provide free flow in one direction and a positive check in the opposite direction. They are available with a variety of port types and sizes and may be mounted in any position.

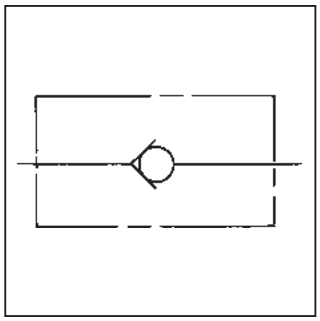

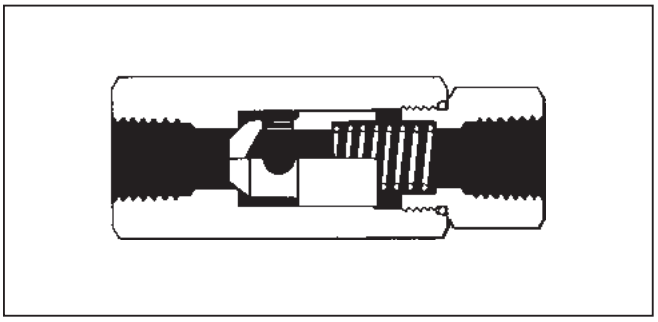

Specifications

Maximum Operating Pressure	207 Bar (3000 PSI)
Flow Rating	Consult pressure drop data
Fluid Recommended	Premium grade hydraulic fluid with viscosity of 10cSt (60 SUS) to 216 cSt (1000 SUS) at operating temperature.
Operating Temperature	Under normal conditions of continuous operation, fluid temperature should not exceed -82°C (180° F). In no instance should the temperature exceed 93°C (200°F).
Material	All steel
Mounting	Not restricted

Features

- Up to 3000 PSI (207 Bar)
- 1/4", 1/2", 3/4" NPTF
- #8, #12, #16 SAE

Performance Curves

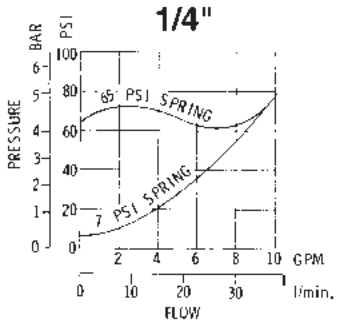

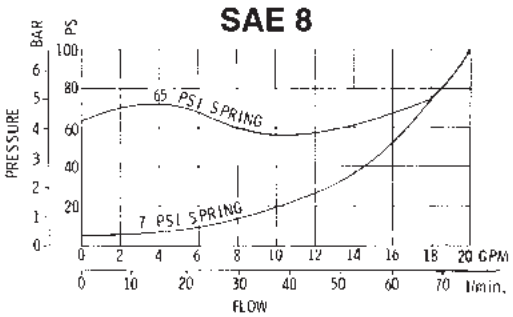

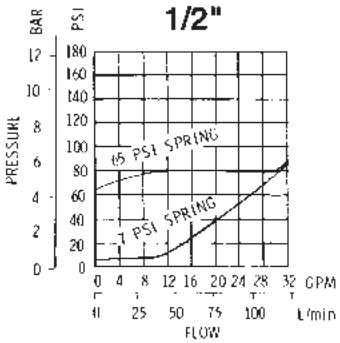

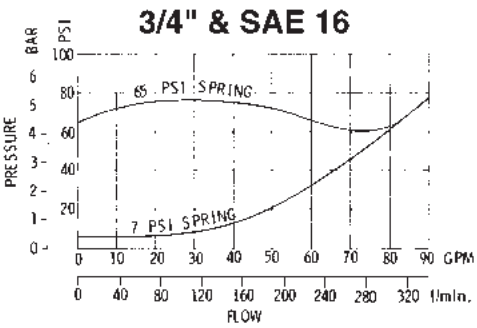

3000-C1.p65, dd

Parker Hannifin Corporation
Hydraulic Valve Division
Elyria, Ohio, USA

C

Ordering Information

CLS — [ ] — [ ] [ ] [ ]

Check Valve | Port Size | Port Type | Spring Rate | Type

Code	Size
25	1/4" NPTF
50	1/2" NPT
75	3/4" NPT
08	SAE 8
12	SAE 12
16	SAE 16

NOTE: NPT ports not available on Male type valves.

Code	Type
1	NPT
2	SAE

Code	Size
7	7 PSI
45	45 PSI
65	65 PSI

Code	Type
M	Male
F	Female

Weight (approx.)

¼" . . . . . 0.50 lbs. [0,23 kg]
½" . . . . . 1.00 lbs. [0,45 kg]
¾" . . . . . 2.88 lbs. [1,30 kg]
SAE 8 . . . . . 1.00 lbs. [0,45 kg]
SAE 12 . . . . . 2.80 lbs. [1,27 kg]
SAE 16 . . . . . 3.00 lbs. [1,36 kg]

Dimensions

Millimeter equivalents for inch dimensions are shown in (**)

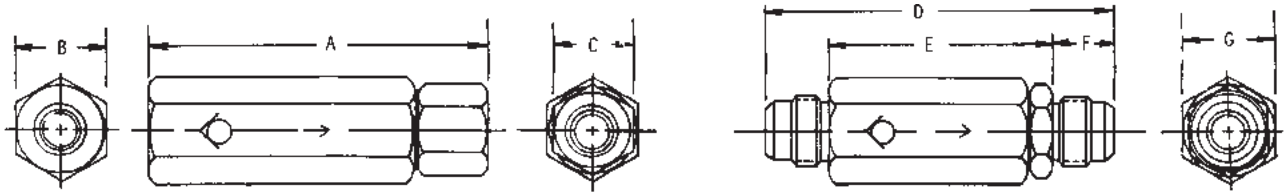

VALVE SIZE NPT & FEMALE SAE	A	B	C
1/4"	3.30 (83.8)	0.88 (22.3)	0.75 (19.1)
SAE 8	3.66 (92.9)	1.00 (25.4)	0.88 (22.3)
1/2" & SAE 10	4.50 (114.3)	1.38 (35.0)	1.25 (31.7)
3/4" & SAE 12	5.22 (132.6)	1.75 (44.4)	1.50 (38.1)

VALVE SIZE MALE TUBE	D	E	F	G
SAE 12	5.30 (134.6)	3.58 (90.9)	0.86 (21.8)	1.75 (44.4)
SAE 16	5.36 (136.1)	3.54 (89.9)	0.91 (23.1)	1.75 (44.4)

General Description

Series VLS velocity check valves protect your hydraulic system in the event of line rupture. These valves return to the open position once the pressure is equalized.

Series VLS valve is a flow sensing, hydraulic check. Flow will pass through the check until the designated closing flow is reached. Then the check will close, stopping further flow.

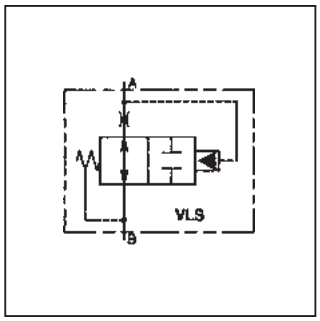

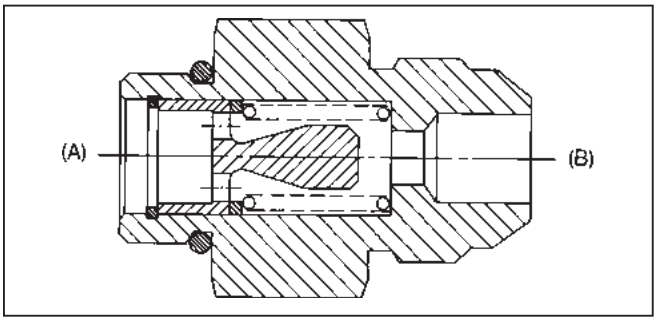

Features

- Up to 207 Bar (3,000 PSI), 0.01 to 23.8 LPM (0.5 to 90 GPM)

Specifications

Maximum Operating Pressure	207 Bar (3000 PSI)
Normal Closing Flow	To be based on a nominal 3.5 Bar (50 PSI) with 150 SUS oil
Leakage After Closing	10 DPM maximum
Reverse Flow	Not to exceed 150% of specified closing flow
Fluid Recommended	Premium grade hydraulic fluid with viscosity of 10cSt (60 SUS) to 216 cSt (1000 SUS) at operating temperature.

Operating Temperature	Under normal conditions of continuous operation, fluid temperature should not exceed -82°C (180° F). In no instance should the temperature exceed 93°C (200°F).
Torque Required for Installation	See chart
Material	All steel
Seals	Nitrile standard. For other seal compounds, consult factory
Mounting	Not restricted

C

VLS	—	☐	M	☐	—	☐	M	☐	—	☐
Velocity Fuse		Inlet Porting	Male Thread	Port Type		Outlet Porting	Male Thread	Port Type		Fusing Flow

Code	Size
50	1/2" NPTF
06	SAE -6
08	SAE -8
10	SAE -10
12	SAE -12

Code	Type
1	NPTF
2	SAE

Code	Size
50	1/2" NPTF
06	SAE -6
08	SAE -8
10	SAE -10
12	SAE -12

Code	Type
1	NPTF
2	SAE
3	JIC
4	ORS

Code	Flow*
0.8	3.0 LPM (0.8 GPM)
1.5	5.7 LPM (1.5 GPM)
2.0	7.6 LPM (2.0 GPM)
3.0	11.4 LPM (3.0 GPM)
6.0	22.7 LPM (6.0 GPM)
7.0	26.5 LPM (7.0 GPM)
10	37.9 LPM (10 GPM)
22	83.3 LPM (22 GPM)

VLS Flow Chart	
Max Flow	**Models**
26.5 LPM (7 GPM)	06M2-06M3
37.9 LPM (10 GPM)	08M2-08M3 10M2-08M4
45.4 LPM (12 GPM)	10M2-10M3
56.8 LPM (15 GPM)	50M1-50M1
90.8 LPM (24 GPM)	12M2-12M3

Inch equivalents for millimeter dimensions are shown in (**)

SAE TO JIC
MALE TO MALE

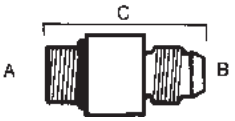

A (In.)	B (In.)	C (In.)	C (mm)	Hex (In.)	Hex (mm)	Part Number	Recommended Installation Torque* (In Lb. Ft.) In Aluminum	In Steel
3/8	3/8	1.30	(33.0)	11/16	(17.5)	VLS-06M2-06M3-**	85-100	13-16
1/2	1/2	2.25	(57.2)	7/8	(22.2)	VLS-08M2-08M3-**	15-20	25-33
5/8	5/8	2.06	(52.3)	1	(25.4)	VLS-10M2-10M3-**	25-30	42-50
3/4	3/4	1.97	(50.0)	1 1/4	(31.8)	VLS-12M2-12M3-**	35-40	55-65

NPT TO NPT
MALE TO MALE

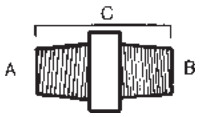

A (In.)	B (In.)	C (In.)	C (mm)	Hex (In.)	Hex (mm)	Part Number	Recommended Installation Torque* (In Lb. Ft.) In Aluminum	In Steel
1/2	1/2	1.90	(48.4)	7/8	(22.2)	VLS-50M1-50M1-**	55-60	85-90

SAE TO ORS
MALE TO MALE

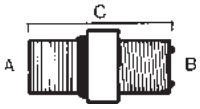

A (In.)	B (In.)	C (In.)	C (mm)	Hex (In.)	Hex (mm)	Part Number	Recommended Installation Torque* (In Lb. Ft.) In Aluminum	In Steel
3/8	3/8	1.25	(31.8)	3/4	(19.1)	VLS-06M2-06M4-**	85-100	13-16
5/8	1/2	2.10	(53.3)	1	(25.4)	VLS-10M2-08M4-**	25-30	42-50

General Description

Series 440 and 450 high pressure check valves permit free flow in one direction, and shut off in the reverse direction with an extremely low internal leakage. These valves are ruggedly built for systems with high shock and high velocity, and will close smoothly.

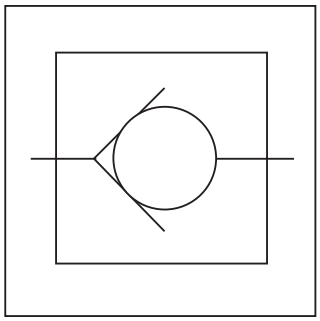

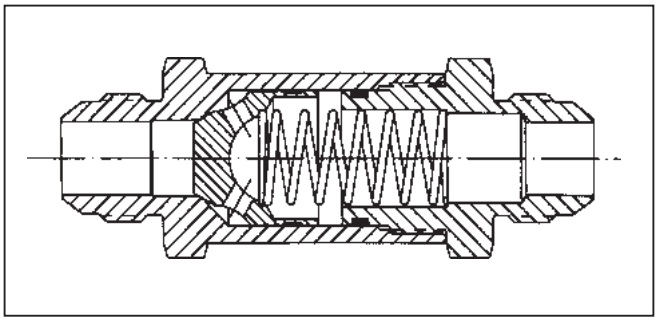

Features

- High-pressure check valves.
- Poppet 440F stainless steel.
- For high-shock service.
- AN and MS valves are qualified to military specifications MIL-V-5524 and MIL-V-19069.

C

Specifications

Service App.	Hydraulic	
Maximum Operating Pressure	Working:	Aluminum alloy 207 Bar (3000 PSI) Steel and Stainless Steel 345 Bar (5000 PSI)
	Proof:	Aluminum alloy 345 Bar (4500 PSI) Steel and Stainless Steel 517.5 Bar (7500 PSI)
Nominal Cracking Pressure	0.4 Bar (6 PSI), ± 0.14 Bar (2 PSI), or 4.5 Bar (65 PSI), ± 0.4 Bar (6 PSI) Below 0.4 Bar (6 PSI), ±33% 0.4 - 1.4 Bar (6 - 20 PSI), ± 0.14 Bar (2 PSI) Above 1.4 Bar (20 PSI) ±10% Other settings available to order	
Operating Temperature	-40°C to +121°C (-40°F to +250°F) Higher on special order	
Internal Leakage	1 drop in 2 minutes	
Sizes	NPT:	1/8", 1/4", 3/8", 1/2", 3/4", 1", 1 1/4", 1 1/2", 2"
	FLD, FLS:	4", 6", 8", 10", 12", 16", 20", 24", 32"

Mounting	In-line	
Ports	NPT:	Pipe threads
	FLD:	Flared tube connection SAE 30° MS33656
	FLS:	Flareless tube connection MS33514
	IST:	Internal straight threads per MS33649
Material	Body & Cap:	Aluminum alloy, steel or 303 Stainless steel
	Poppet:	Hardened 440F Stainless Steel
	Tube:	Steel and aluminum valves: aluminum alloy Stainless steel valves: 316 Stainless steel
	Spring:	302 Stainless Steel
	Finish:	Aluminum alloy, anodized; steel, cadmium plated; stainless steel
	O-ring:	Synthetic rubber. Aluminum and stainless steel valves, sizes 4 - 16, when furnished to MS28765, MS28771, MS28890 and MS28892 only, O-rings are Code 27 (MIL-P-25732)
	Back-up rings:	PTFE

Valve	Size	Weights, Maximum (Approx.)		CV Factors	
Tube	**Pipe**	**Aluminum Alloy**	**Steel & Stainless Steel**	**440 Series**	**450 Series**
4	1/8	0.03 kg (0.06 lbs.)	0.06 kg (0.13 lbs.	.06	0.84
6	1/4	0.06 kg (0.13 lbs.)	0.12 kg (0.25 lbs.)	1.6	1.6
8	3/8	0.12 kg (0.25 lbs.)	0.23 kg (0.5 lbs.)	2.6	2.7
10	1/2	0.17 kg (0.38 lbs.)	0.28 kg (0.63 lbs.)	4.1	4.2
12	3/4	0.23 kg (0.5 lbs.)	0.57 kg (1.25 lbs.)	6.5	6.5
16	1	0.40 kg (.88 lbs.)	0.85 kg (1.88 lbs.)	11	10
20	1 1/4	1.13 kg (2.5 lbs.)	2.3 kg (5.0 lbs)	18	18
24	1 1/2	1.13 kg (2.5 lbs.)	2.3 kg (5.0 lbs)	24	23

Ordering Information

453 - -1/4 S 2 - 6

Catalog Number

448	Inlet FLS, Outlet FLS
453	Inlet NPT, Outlet NPT
458	Inlet FLD, Outlet FLD
459	Inlet NPT, Outlet NPT

Size and Type Ports

4 IST or FLD or FLS	
6 IST or FLD or FLS	1/4 NPT
8 IST or FLD or FLS	3/8 NPT
10 IST or FLD or FLS	1/2 NPT
12 IST or FLD or FLS	3/4 NPT
16 IST or FLD or FLS	1 NPT
20 IST or FLD or FLS	1-1/4 NPT
24 IST or FLD or FLS	1-1/2 NPT

Materials

- D Aluminum Alloy
- S Steel
- SS Stainless Steel

O-Ring Code

- 2 Nitrile
- 27 MIL-P-25732
- Others Available See O-Ring Code & Media Chart Reference Section

Cracking Pressure

- 6 6 PSI ± 2
- Others Available Consult Factory

Phase Out

Valves meet or exceed AN or MS military specifications as shown.
Part numbers marked * should be used for new production, and for replacement of parts marked †.
PARTS MARKED † SHOULD NOT BE USED IN PLACE OF THOSE MARKED *.

NOTE: AN and MS part numbers require the addition of a dash number for size identification, example MS28892-12.

MS or AN Number	Materials	Pressure P.S.I.	Military Spec.
†AN6207	Alum. Alloy	1500	MIL-V-5524
†AN6249	Alum. Alloy	3000	MIL-V-5524
*MS28771	Alum. Alloy, Stain. Steel	3000	MIL-V-19069
†MS28890	Alum. Alloy	3000	MIL-V-5524
*MS28892	Alum. Alloy, Stain. Steel	3000	MIL-V-19069

** Add dash number for size and SS for Stainless Steel or AL for Aluminum.

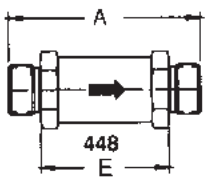

MS28890 & MS28892

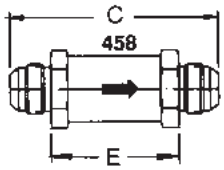

AN6207, AN6249, MS28771

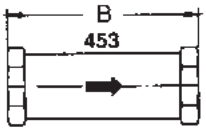

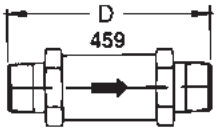

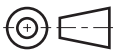

Valve Size		All Dimensions in Inches					
Tube	Pipe	A	B	C	D	E	Flats F
4		2 7/16	2 11/32	2 41/64	2 7/16	1 17/32	11/16
6	1/4	2 11/16	2 11/16	2 55/64	3 1/32	1 3/4	13/16
8	3/8	3 11/32	3 3/8	3 17/32	3 17/32	2 7/32	1 1/16
10	1/2	3 21/32	3 23/32	3 59/64	3 15/16	2 13/32	1 1/8
12	3/4	4 1/8	4 5/64	4 31/64	4 3/8	2 3/4	1 7/16
16	1	4 11/16	4 7/8	5 1/8	5 13/32	3 5/16	1 11/16
20	1 1/4	5 7/16	6	5 15/16	6 3/16	4 1/16	2 1/4
24	1 1/2	5 5/8	6 3/16	6 13/32	6 17/32	4 1/4	2 1/2
32	2	6 3/16	7	7 15/32	7 1/8	4 13/16	3

General Description

Series 480 free flow check valves permit free flow in one direction, and shut off in the reverse direction. Series 480 check valves can handle high velocity and will provide low pressure drop and zero leakage.

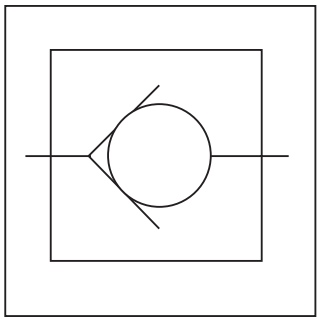

C

Features

- Resilient molded seal is permanently locked to poppet which ensures zero leakage in high velocity applications.

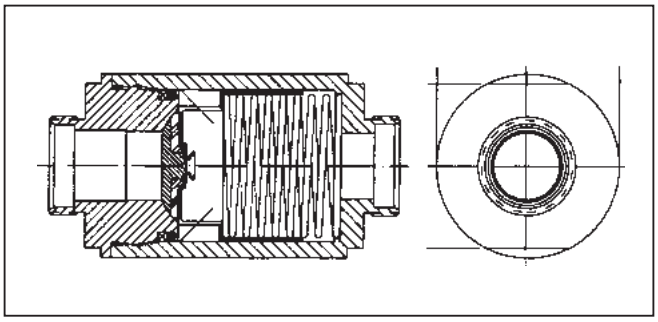

Specifications

Service App.	Pneumatic or Hydraulic		**Mounting**	In-line	
Maximum Operating Pressure	Working: Proof: Burst:	207 Bar (3000 PSI) 345 Bar (4500 PSI) 517.5 Bar (7500 PSI)	**Ports**	NPT: FLD: FLS: IST:	Pipe threads Flared tube connection SAE 30° MS33656 (AND10056) Flareless tube connection MS33514 Internal straight threads (tube connection) O-ring seals.
Nominal Cracking Pressure	0.14 Bar (2 PSI), ± 0.07 Bar (1 PSI) Other settings available to order		**Material**	Body & Cap: Poppet Body: Poppet Nose: Spring: O-ring: Molded Seal: Back-up ring:	Brass, Aluminum alloy, or 303 Stainless steel 305 Stainless steel 305 Stainless steel AMS5688 Stainless Steel Synthetic rubber. Synthetic rubber PTFE
Operating Temperature	-54°C to +93°C (-65°F to +200°F) Higher temperature limits available				
Internal Leakage	Zero				
Sizes	IPT, EPT: ISD, FLD, FLS:	1/4", 3/8", 1/2", 3/4", 1" 4", 6", 8",			

Valve Size		Weights (Lbs. Approx.)			CV Factors
Tube	Pipe	Brass	Aluminum Alloy	Stainless Steel	Coefficient of Flow
4		.12	.06	.12	.75
6	1/4	.37	.12	.37	1.5
8	3/8	.62	.25	.62	4
	1/2	1.25	.5	1.25	6
	3/4	1.62	.75	1.62	7.5
	1	2.5	1.0	2.5	13

Ordering Information

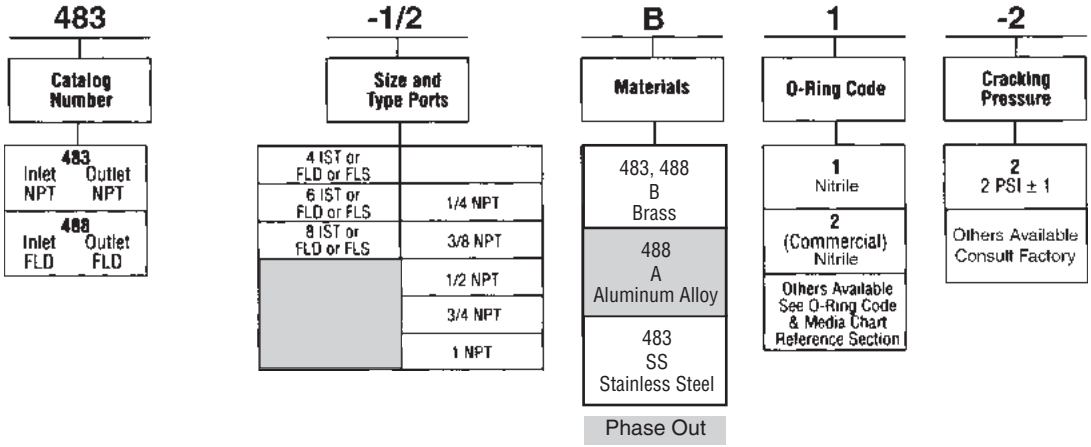

Dimensions

Inch equivalents for millimeter dimensions are shown in (**)

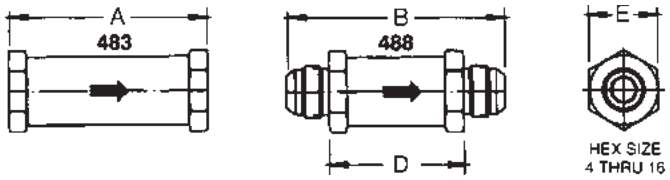

Valve Size		All Dimensions in Inches			
Tube	Pipe	A	B	D	Flats C
4		1 11/16	2 5/8	1 17/32	3/4
6	1/4	2 1/4	2 31/32	1 55/64	1
8	3/8	2 7/16	3 13/32	2 3/32	1 1/4
	1/2	2 15/16	3 31/32	2 29/64	1 1/2
	3/4	3 3/8	4 7/16	2 45/64	1 3/4
	1	3 25/32	4 15/16	3 7/64	2

General Description

Series 580 and 593 swing check valves permit free flow in one direction, and shut off in the reverse direction with an extremely low internal leakage. Series 580 and 593 check valves will provide low pressure drop.

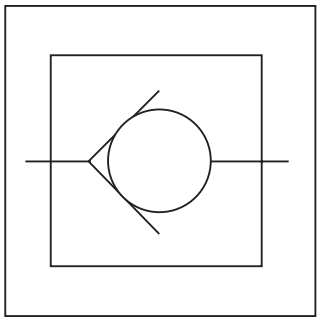

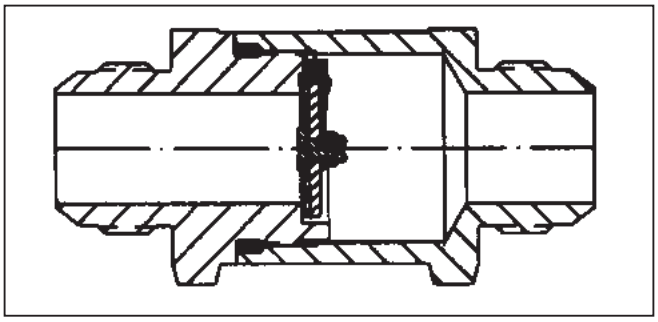

Features

C

- Zero leakage (less than 1 drop per minute).
- Full flow with low opening pressure.
- Improved hinge controls.
- Mounts in any position.
- MS valves meet the following specifications: MS28882A or B, MS28884A or B (see chart).

Specifications

Service App.	Hydraulic or Pneumatic		**Ports**	NPT:	Pipe threads
Maximum Operating Pressure	Working:	Sizes 4 to 16 - 24.2 Bar (350 PSI) Sizes 20 to 32 - 20.7 Bar (300 PSI)		FLD:	Flared tube connection SAE 37° MS33656 (AND10056)
	Cracking:	8 ", 0.02 Bar (0.29 PSI) water max.		IST:	Internal straight threads
Operating Temperature	Code 1	-55°C to +71°C (-67°F to +160°F)	**Material**	Body & Cap:	Aluminum alloy, anodized
Internal Leakage	Zero			Internal Parts:	Aluminum alloy, anodized, and Stainless steel
Sizes	NPT:	1/4", 3/8", 1/2", 3/4", 1", 1 1/4", 1 1/2"		Molded Seal:	Synthetic rubber
	IST, FLD:	4", 6", 8", 10", 12", 16"		O-ring:	Synthetic rubber
Mounting	In-line, mounts in any position				

Valve Size		Weight	CV Factor		
Tube	Pipe		583 Series	588 Series	593 Series
4		2 Oz.	2.5	1.5	1.5
6	1/4	2 Oz.	4.6	3.8	3.8
8	3/8	3 Oz.	7.3	7.1	7.1
10	1/2	3 Oz.	12.0	11.8	11.8
12	3/4	6 Oz.	17.7	17.1	17.1
16	1	8 Oz.	36	35.3	35.3
	1-1/4	14 Oz.	52	58.8	58.8
	1-1/2	1.3 Lbs.	84	82.3	82.3

3000-C1.p65, dd

Parker Hannifin Corporation
Hydraulic Valve Division
Elyria, Ohio, USA

Ordering Information

583 — Catalog Number

583	Inlet NPT	Outlet NPT
588	Inlet FLD	Outlet FLD
593	Inlet IST	Outlet IST

-1/8 — Size and Type Ports

4 IST or FLD	1/4 NPT
6 IST or FLD	3/8 NPT
8 IST or FLD	1/2 NPT
10 IST or FLD	3/4 NPT
12 IST or FLD	1 NPT
16 IST or FLD	1-1/4 NPT
	1-1/2 NPT

D — Materials

D Aluminum Alloy

1 — O-Ring Code

1 Nitrile

63 Flurosilicone Others Available

Type Port Inlet	Type Port Outlet	MS Number Ref.Only
FLD	FLD	MS28884A – 4D1 MS28884A – 6D1 MS28884A – 8D1 MS28884A – 10D1 MS28884A – 12D1 MS28884A – 16D1 MS28884A – 20D1 MS28884A – 24D1 MS28884A – 32D1
IST	IST	MS28882A – 4D1 MS28882A – 6D1 MS28882A – 8D1 MS28882A – 10D1 MS28882A – 12D1 MS28882A – 16D1 MS28882A – 20D1 MS28882A – 24D1 MS28882A – 32D1

C

Dimensions

Shown in inches

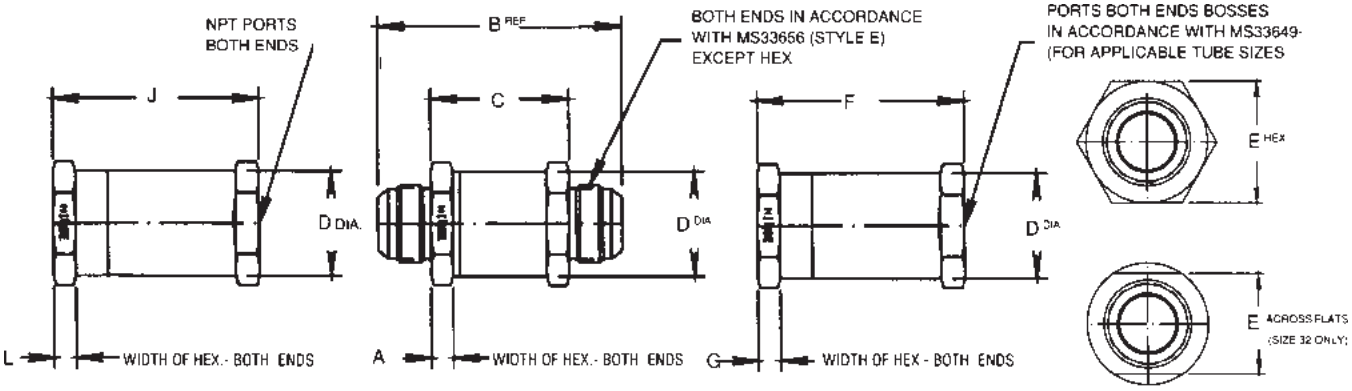

583 SERIES

588 SERIES or MS28884A, MS28884B

593 SERIES or MS28882A, MS28882B

Valve Size Tube	Valve Size Pipe	A Min.	B	C ±.031	D	E	F ± .031	G Min.	H Max.	J ± .031	K Min.	L Min.
4		.125	2.663	1.563	1.032	1.066/1.057	2.031	.250	3/4	1.906	.250	1/4
6	1/4		2.675									
8	3/8		2.988	1.674	1.157	1.190/1.181	2.344		1	2.031		
10	—	.250	3.298	1.782			2.844	.375		—		—
—	1/2	—	—	—	1.220	1.253/1.244	—	—		2.625		5/16
12	3/4	.250	3.791	2.063	1.470	1.503/1.494	3.500	.375		3.000		1/4
16	1		4.197	2.375	1.782	1.820/1.796	3.594			3.532	.375	3/8
	1-1/4	.312	4.604	2.688	2.470	2.508/2.484	4.062	.500		4.140		
	1-1/4	.375	5.229	3.063	2.720	2.758/2.734	4.625			4.140		

3000-C1.p65, dd

Parker Hannifin Corporation
Hydraulic Valve Division
Elyria, Ohio, USA

C

General Description

Series J416 and J417 mini-check valves permit free flow in one direction and near zero leakage in the reverse direction. Series J416 and J417 check valves are used in applications with restricted weight and space constraints.

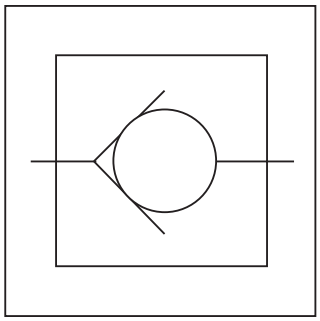

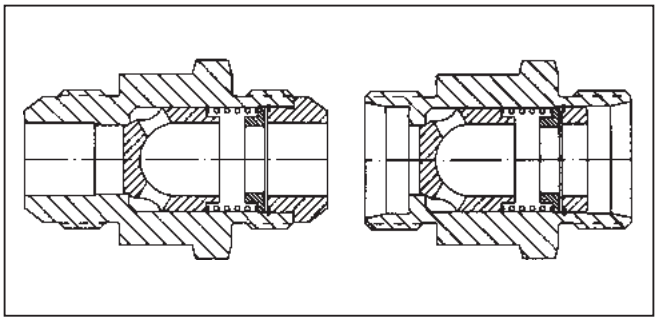

Specifications

Service App.	Any liquid compatible with 316SS, and hardened 440 FSS
Maximum Operating Pressure	Working: 345 Bar (5000 PSI) maximum Proof: 517.5 Bar (7500 PSI) Burst: 828 Bar (12,000 PSI) Cracking: 0.3 Bar (5 PSI), ± 0.2 Bar (3 PSI)
Operating Temperature	-40°C to +82°C (-40°F to +180°F)
Internal Leakage	Zero above 0.3 Bar (5 PSI) 1 DPM maximim below 0.3 Bar (5 PSI)
Sizes	4", 6", 8", 12"
Ports	FLD: Flared tube connection SAE 37° MS33656 FLS: Flareless tube connection MS33514
Material	Body & Nose: 316 Stainless steel Poppet: 440C Stainless steel Spring: AMS5688 Stainless steel

Ordering Information

J416A — Catalog Number

J416A		J417A	
Inlet	Outlet	Inlet	Outlet
FLD	FLD	FLS	FLS

-4 — Size & Type Ports

- 4 FLD or FLS
- 6 FLD or FLS
- 8 FLD or FLS
- 12 FLD or FLS

SS — Materials

SS Stainless Steel

-5 — Cracking Pressure

5 PSI ± 3

MS Part Number	
Flared	Flareless
MS24593-4	MS24423-4
MS24593-6	MS24423-6
MS24593-8	MS24423-8
MS24593-10	MS24423-10
MS24593-12	MS24423-12
MS24593-16	MS24423-16

Dimensions – Shown in inches

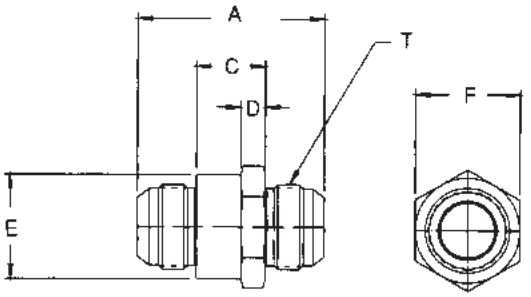

MS24593 or J416A

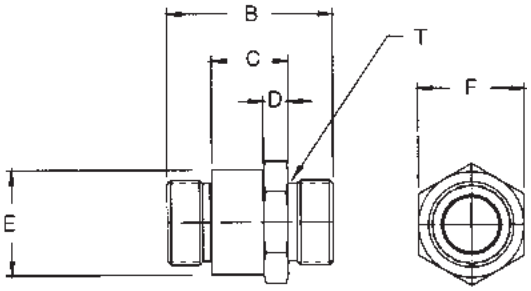

MS24423 or J417A

Valve Size Pipe	Valve Size Tube	T Thread	A Ref.	B Ref.	F Hex		C	D	E Dia.	Flow GPM	Weight Lbs.	Cv Factor
1/4	4	.4375-20UNJF-3A	1.538	1.344	.688	+ .003 - .004	.438	.219	.678	1.2	.07	.38
3/8	6	.5625-18UNJF-3A	1.581	1.407	.813		.469	.250	.803	3.5	.105	.99
1/2	8	.7500-18UNJF-3A	1.814	1.624	1.000		.500	.281	.990	6.0	.195	1.98
3/4	12	1.0625-12UNJ-3A	2.290	1.938	1.375		.562	.343	1.365	16.0	.450	4.45

3000-C1.p65, dd

Parker Hannifin Corporation
Hydraulic Valve Division
Elyria, Ohio, USA

General Description

Series CP check valves permit free flow in one direction; flow in the opposite direction is blocked until pilot presssure unseats the poppet and permits flow in the opposite direction.

Choice of pilots operated by either air or oil.

For fast response without decompression, select the single-stage poppet having a 5 to 1 ratio of pilot piston area to check valve area.

To eliminate hydraulic shock and surge on opening, select the decompression type 2-stage poppet which has a 40 to 1 ratio of pilot piston area to decompression poppet area. This valve is ideal for controlling 207 Bar (3000 PSI) line pressures by means of 5.5 Bar (80 PSI) pilot pressure.

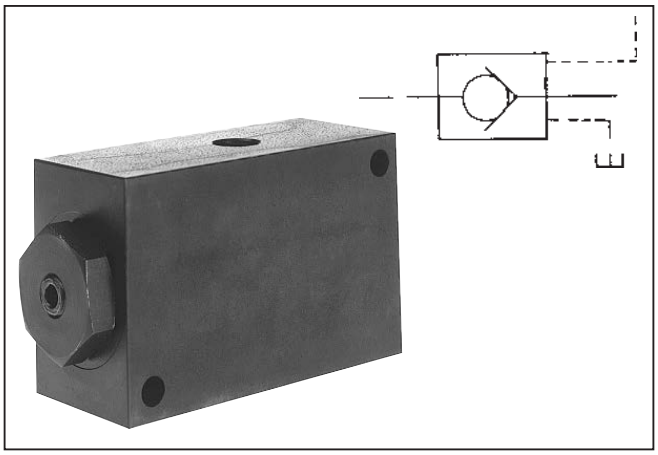

Performance Curves

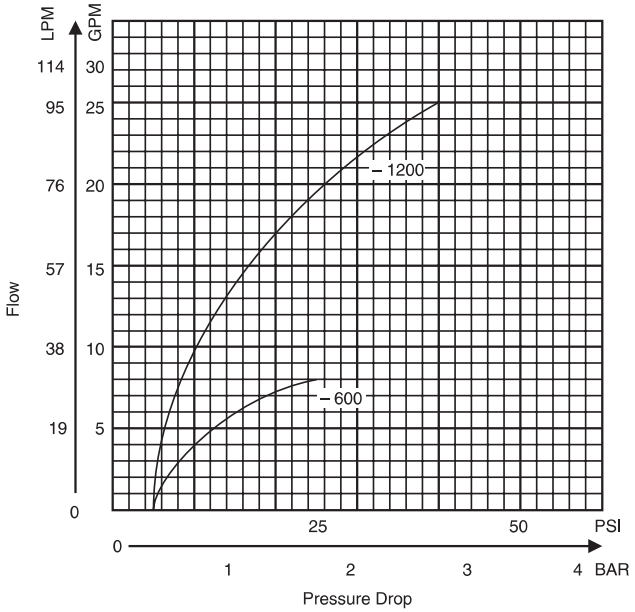

Flow vs. Pressure Drop

Specifications

Maximum Operating Pressure	Poppet Type B: 7 Bar (100 PSI) Poppet Type N: 60 Bar (800 PSI) Poppet Type M: 210 Bar (3000 PSI)
Maximum Pilot Pressure	Air: BACP, BACPS 6 Bar (80 PSI) Oil: CP1200, CPS1200 70 Bar (1000 PSI) CP600, CPS600 210 Bar (3000 PSI)
Cracking Pressure	0.4 Bar (5 PSI) Free flow direction
Material	Type B: Nitrile Type N: Nylon Type M: Solid Metal

Flow Data

Valve Model	Flow, Max. GPM (L/M)	Pilot Piston Area To Decompression Poppet Area	Pilot Piston Area To Check Valve Area	Port Size
CP*600S5 BACP*600S5	8 (30)	—	5:1	3/8 NPTF
CP*600S40 BACP*600S40	8 (30)	40:1	5:1	3/8 NPTF
CP*1200S5 BACP*1200S5	25 (95)	—	5:1	3/4 NPTF
CP*1200S40 BACP*1200S40	25 (95)	40:1	5:1	3/4 NPTF

Note: Models CP/CPS are oil-operated pilot
Models BACP/BACPS are air-operated pilots

*Insert "S" in model code for subplate mounted valve.

3000-C1.p65, dd

Parker Hannifin Corporation
Hydraulic Valve Division
Elyria, Ohio, USA

C

Example: "BACP600S40N" means air pilot-operated 3/8" in-line check valve, steel, two-stage 40-to-1 pilot ratio, nylon poppet for 800 PSI maximum line pressure, with nitrile seals.

[ ] CP [ ] [ ] S [ ] [ ] [ ]

PILOT TYPE

Omit	Oil Pilot
B A	Air Pilot

PILOT OPERATED CHECK

MOUNTING STYLE

Omit	Inline Mounted
S	Subplate Mounted

SIZE

600	3/8"
1200	3/4"

MATERIAL

S	Steel

POPPET RATIO

5	5:1	Single Stage
40	40:1	Two Stage

POPPET STYLE

B	Soft Seal Poppet	100 PSI Max.
N	Nylon Poppet	800 PSI Max.
M	Metal Poppet	*3000 PSI Max.

*3000 PSI is the system pressure rating. The pilot pressure rating is 80 PSI for Air Pilot, 1000 PSI for Oil Pilot 1200 size and 3000 PSI for Oil Pilot 600 size.

SEAL

Omit	Nitrile
V	Fluorocarbon

Bolt Kits

Valve	Bolt Kit	Bolt Specification* SAE Grade 8 or Better	Bolt Torque
CPS600S BACPS600S	BK10	5/16-18 x 2-1/2"	20-25 FT.-LB.
CPS1200S BACPS1200S	BK14	3/8-16 x 3"	45-50 FT.-LB.

Millimeter equivalents for inch dimensions are shown in (**)

Models CP and BACP

In-line pilot operated check valves, optional air or oil operated pilots

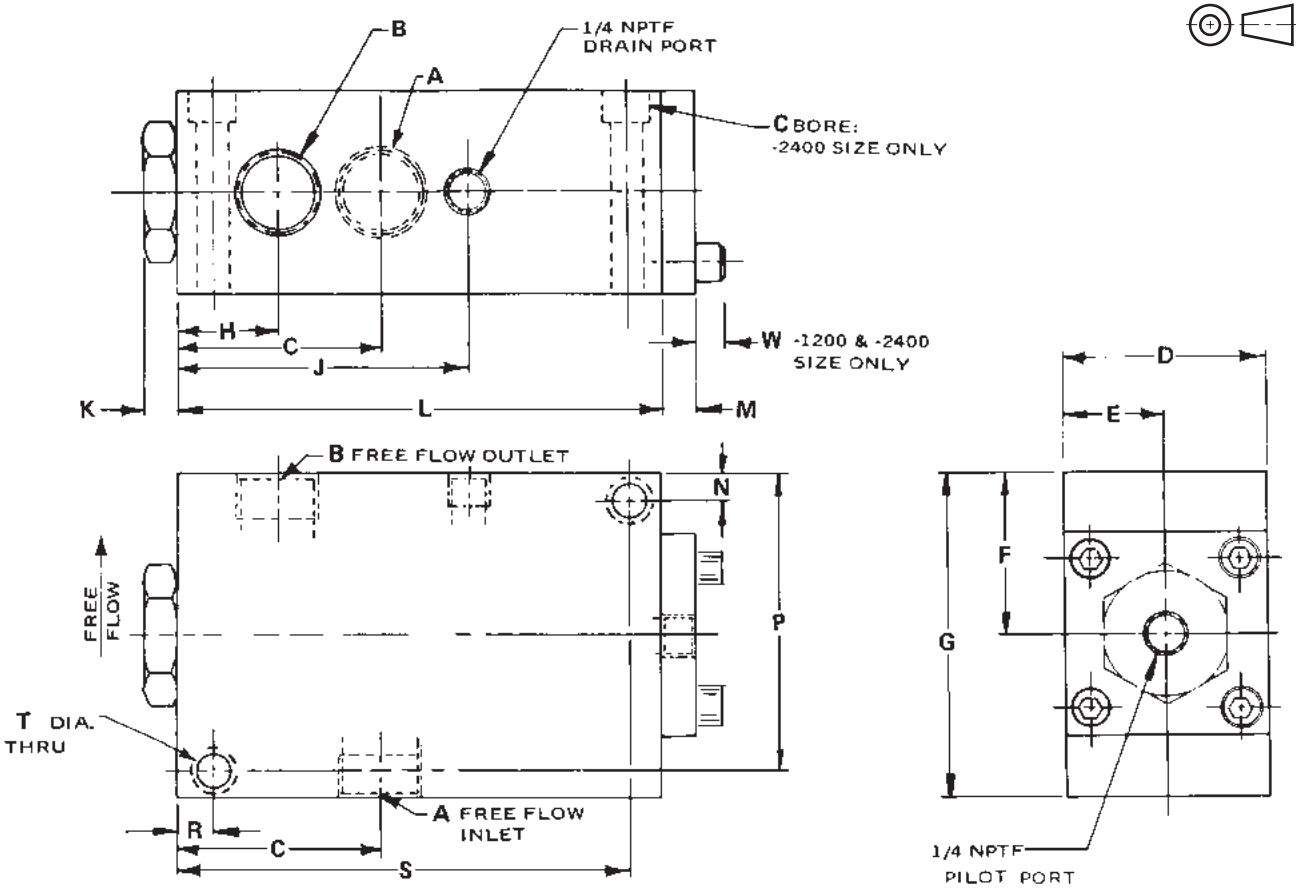

Valve Size	A&B Thread	C	D	E	F	G	H	J	K
CP600S BACP600S	3/8—18 NPTF	2.10 (53.3)	2.00 (50.8)	1.00 (25.4)	1.50 (38.1)	3.00 (76.2)	1.00 (25.4)	3.00 (76.2)	.41 (10.4)
CP1200S BACP1200S	3/4—14 NPTF	2.50 (63.5)	2.50 (63.5)	1.25 (31.8)	2.00 (50.8)	4.00 (101.6)	1.25 (31.8)	3.61 (91.2)	.42 (10.7)

Valve Size	A&B Thread	L	M	N	P	R	S	T	W
CP600S BACP600S	3/8—18 NPTF	4.75 (120.7)	.42 (10.7)	.37 (9.4)	2.62 (66.5)	.37 (9.4)	4.37 (111)	.36 (9.1)	— —
CP1200S BACP1200S	3/4—14 NPTF	6.00 (152.4)	.45 (11.43)	.44 (11.2)	3.56 (90.4)	.44 (11.2)	5.56 (141.2)	.42 (10.7)	.31 (7.9)

C

Millimeter equivalents for inch dimensions are shown in (**)

Models CP and BACP

Manifold mounted pilot operated check valves, optional air or oil operated pilots

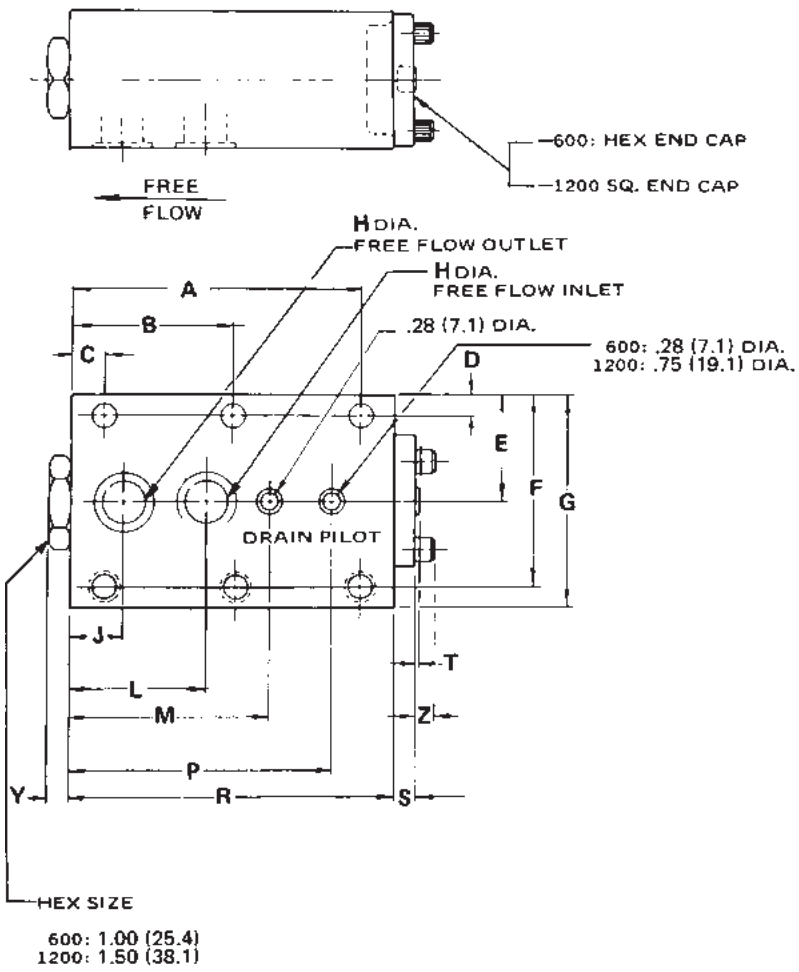

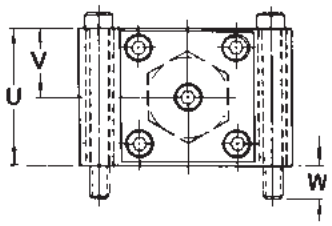

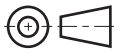

	Valve Model	
	CPS600S BACPS600S	CPS1200S BACPS1200S
A	4.25 (108.0)	5.37 (136.4)
B	2.37 (60.2)	3.00 (76.2)
C	.50 (12.7)	.62 (15.7)
D	.34 (8.6)	.40 (10.2)
E	1.50 (38.1)	2.00 (50.8)
F	2.65 (67.3)	3.59 (91.2)
G	3.00 (76.2)	4.00 (101.6)
H	.44 (11.2)	.75 (19.1)
J	.84 (21.3)	1.00 (25.4)
L	2.10 (53.3)	2.50 (63.5)
M	3.00 (76.2)	3.69 (93.7)
P	4.00 (101.6)	5.00 (127.0)
R	4.75 (120.7)	6.00 (152.4)
S	.42 (10.7)	.45 (11.4)
T	.04 (1.0)	.04 (1.0)
U	2.00 (50.8)	2.50 (63.5)
V	1.00 (25.4)	1.25 (31.8)
W	.50 (12.7)	.50 (12.7)
Y	.31 (7.9)	.40 (10.2)
Z	—	.31 (7.9)
Weight Lb. (Kg)	7.7 (4)	16 (7)

Millimeter equivalents for inch dimensions are shown in (**)

	Valve Model	
	600	1200
C	.344 (8.7)	.375 (9.5)
D	1.875 (47.6)	2.375 (60.3)
E	1.600 (40.6)	1.880 (47.8)
G	2.500 (63.5)	3.067 (77.9)
H	—	—
J	3.500 (88.9)	4.192 (106.5)
K	3.750 (95.3)	4.750 (120.7)
M	4.750 (120.7)	6.000 (152.4)
R	1.156 (29.4)	1.594 (40.5)
S	2.312 (58.7)	3.187 (81.0)
U	4.500 (114.3)	5.440 (138.2)
V	5/16–18	3/8–16
W	.281 (7.1)	.281 (7.1)
X	.469 (11.9)	.750 (19.1)
Y	.620 (15.7)	.620 (15.7)

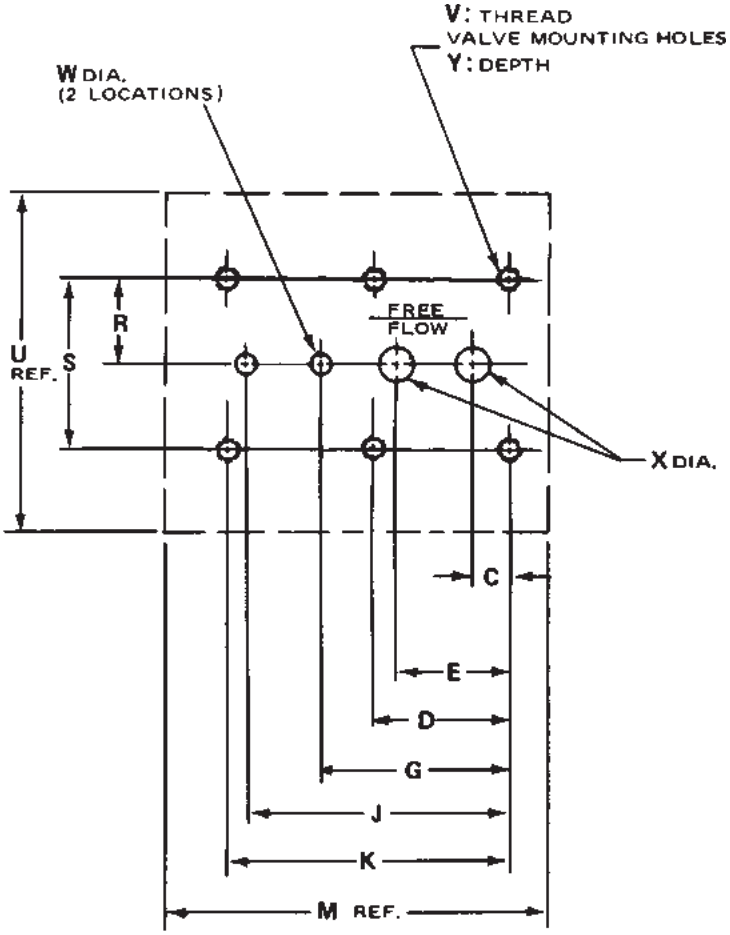

C

General Description

Series 419 shuttle valves allow for the selection of a hydraulic circuit when there is more than one control source in the hydraulic circuit. An increased pressure in one source causes the valve to actuate, providing flow to and from that source. The shuttle will remain in its position for flow in either direction until a differential pressure of approximately 40 psi (±10) is reached in the alternate circuit.

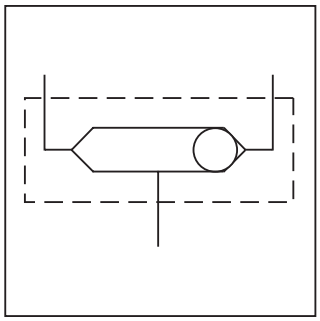

Features

- Conforms to military specifications:
  (1) MS28767 (Type II systems)
  (2) AN6277 (Type I systems
  (3) MIL-V-5530A.
- Shuttle detented to prevent blocking of outlet port.

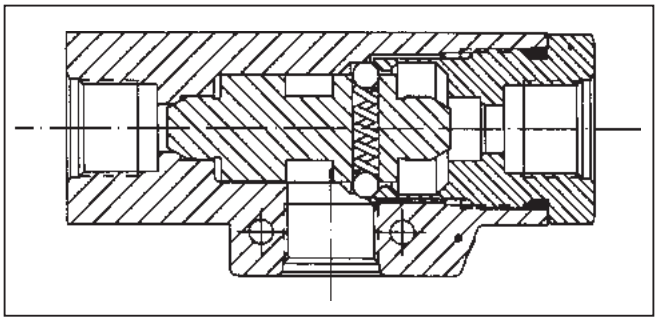

Specifications

Service App.	Hydraulic
Maximum Operating Pressure	Working: 345 Bar (5000 PSI) Proof: 310.5 Bar (4500 PSI) Burst: 517.5 Bar (7500 PSI) Shuttles at 2.8 Bar (40 PSI), ±10 differential pressure
Operating Temperature	-54°C to +135°C (-65°F to +275°F) for Type II systems
Sizes	IST: 4", 6"
Ports	IST: Internal straight threads (tube connection) AND10050 O-ring seal
Mounting	Two 3/16" diameter holes through
Interflow	Between source ports during shuttle movement: 3cc (0.18 cu. in.) max.
Internal Leakage	1 DPM Max. from closed port
Material	Body: Forged aluminum alloy, anodized Cap: Aluminum alloy, anodized Shuttle: 303 Stainless steel Spring: AMS5688 Stainless steel Balls: 440 Stainless steel O-ring: Synthetic rubber Lockwire: Stainless steel Back-up Ring: PTFE

Ordering Information

419	-4	D	27
Catalog Number	Size and Type Ports	Materials	O-Ring Code
419 Shuttle Valve	4 IST 6 IST	D Aluminum Alloy	27 MIL-P-25732 Others Available

MS Equivalent			
Size	**Type Ports**	**Part Number**	**Military Number**
4	IST	419 - 4D27	MS 28767-4
6	IST	419 - 6D27	MS 28767-6

Dimensions

Shown in inches

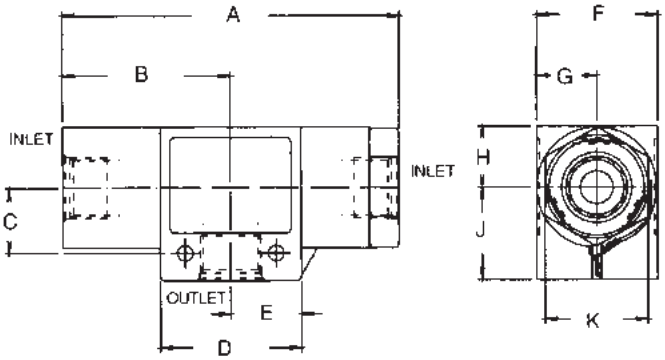

Valve Size	A ± .031	B	C	D	E	F +0,-1/32	G Min.	H	J	K Hex.	Flow GPM	Weight Ozs.	CV Factor
4	3.750	1-7/8	3/4	.875	7/16	1	.492	1/2	1	15/16	1.2	7	.32
6	3.875	1-15/16	3/4	1.125	9/16	1-1/4	.617	5/8	1	1-1/8	3.5	9-1/2	1.0

3000-C1.p65, dd

Parker Hannifin Corporation
Hydraulic Valve Division
Elyria, Ohio, USA

General Description

Series CS check valves permit free flow in one direction, and total shut-off automatically in the reverse direction.

Poppet checks, not ball checks, are standard on all Series CS check valves. Poppets eliminate chatter and minimize wear.

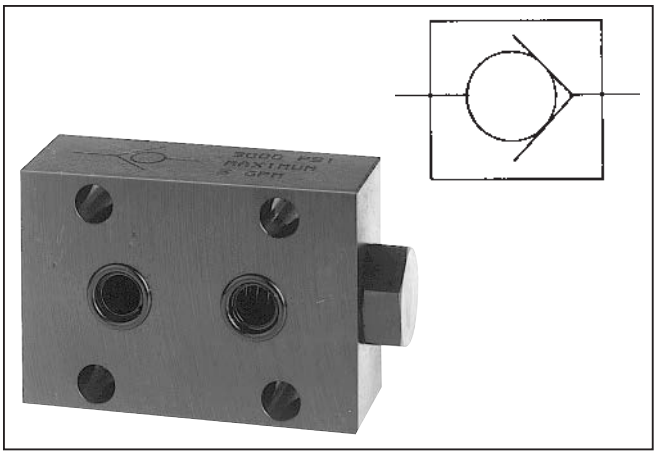

Features

- Stainless steel poppets standard.
- Triangular retainers guide the poppets and hold the spring firmly in place even under high velocity and shock.

Specifications

Maximum Operating Pressure	210 Bar (3000 PSI)
Nominal Cracking Pressure	0.3 Bar (5 PSI) Other cracking pressures may be available on request.
Standard Options	1.3 Bar (20 PSI) 4.5 Bar (65 PSI)
Poppet Style	Solid metal poppet, Stainless steel

Quick Reference Data Chart

Model Number	Port Size	Rate LPM (GPM)	Free Flow C_V GPM	Orifice area, in^2	ΔP at Max. Flow Bar (PSI)
CS400	1/4	23 (5)	1.56	0.068	0.6 (9)
CS600	3/8	30 (8)	2.27	0.099	0.8 (11)
CS800	1/2	45 (15)	5.11	0.224	0.6 (8)
CS1200	3/4	100 (25)	7.95	0.348	0.9 (13)
CS1600	1	150 (40)	10.35	0.453	0.9 (13)

C

Ordering Information

CS		S		
Check Valve Subplate Mounted	Size	Material	Cracking Pressure	Seal Material

CS	Subplate Mounted

400	1/4"
600	3/8"
800	1/2"
1200	3/4"
1600	1"

S	Steel

Omit	5 PSI Standard
20	20 PSI
65	65 PSI
80*	80 PSI

Other cracking pressures may be available on request.

*80 PSI cracking pressure available on 1200 size and smaller.

Omit	Nitrile
V	Fluorocarbon

Bolt Kits To order bolt kits, specify bolt kit number

Valve	Bolt Kit	Bolt Specification*	Bolt Torque
CS400S	BK01	1/4-20 x 1-1/4"	13 Ft.-Lbs.
CS600S	BK02	1/4-20 x 1-1/2"	13 Ft.-Lbs.
CS800S	BK04	1/4-20 x 1-3/4"	13 Ft.-Lbs.
CS1200S	BK08	5/16-18 x 2-1/4"	27 Ft.-Lbs.
CS1600S	BK10	5/16-18 x 2-1/2"	27 Ft.-Lbs.

*Use SAE Grade 8 or Better.

Performance Curves

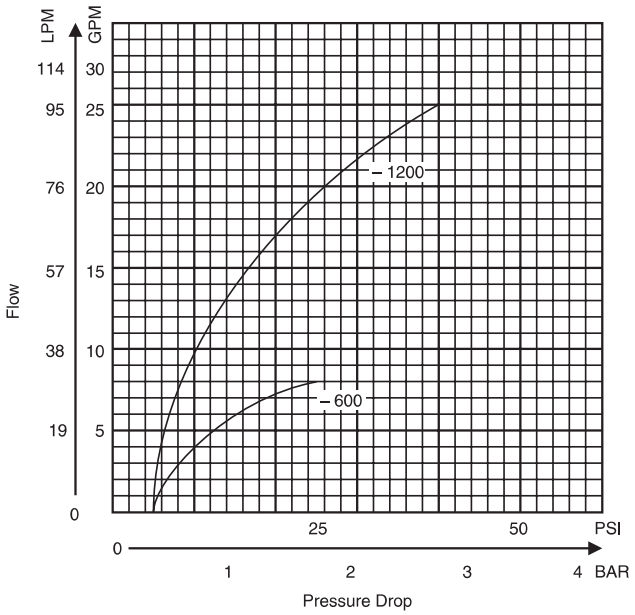

Flow vs. Pressure Drop

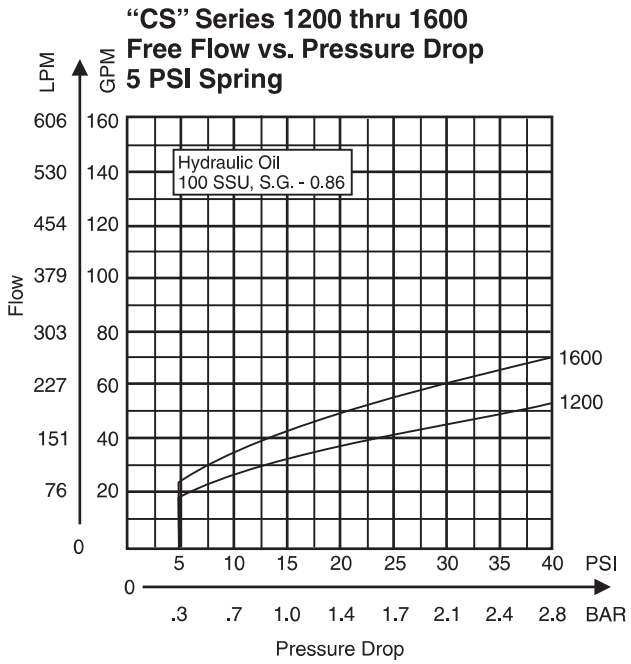

3000-C1.p65, dd

Parker Hannifin Corporation
Hydraulic Valve Division
Elyria, Ohio, USA

Millimeter equivalents for inch dimensions are shown in (**)

Models CS400S through CS1600S

Subplate mounted check valve

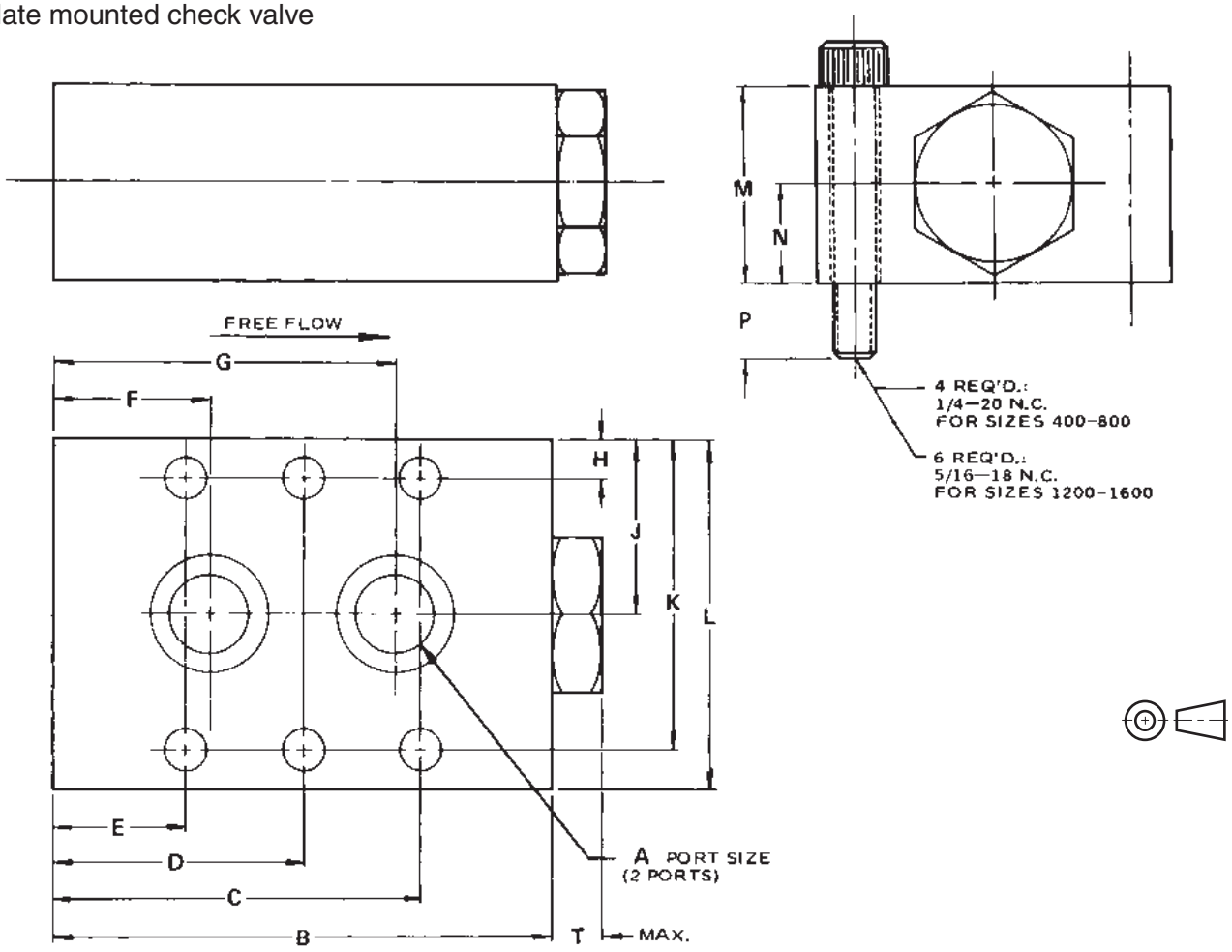

Valve Model	A	B	C	D	E	F	G	H	J	K	L	M	N	P	T	Weight LB. (Kg)
CS400S	.28 (7.1)	2.50 (63.5)	1.93 (49.0)	—	.56 (14.2)	.75 (19.1)	1.75 (44.5)	.21 (5.3)	.87 (22.1)	1.53 (38.9)	1.75 (44.5)	.87 (22.1)	.43 (10.9)	.39 (9.9)	.31 (7.9)	1.1 (0.5)
CS600S	.40 (10.2)	2.75 (51.6)	2.03 (69.9)	—	.71 (18.0)	.87 (22.1)	1.87 (47.5)	.25 (6.4)	1.00 (25.4)	1.75 (44.5)	2.00 (50.8)	1.00 (25.4)	.50 (12.7)	.51 (13.0)	.32 (8.1)	1.6 (0.7)
CS800S	.47 (11.9)	3.18 (80.7)	2.34 (59.4)	—	.84 (21.3)	1.00 (25.4)	2.19 (55.6)	.25 (6.4)	1.12 (28.4)	2.00 (50.8)	2.25 (57.2)	1.25 (31.8)	.62 (15.7)	.52 (13.2)	.32 (8.1)	2.3 (1.0)
CS1200S	.68 (17.3)	4.09 (103.9)	3.54 (89.9)	2.04 (51.8)	.54 (13.7)	.99 (25.1)	3.12 (79.2)	.31 (7.9)	1.37 (34.8)	2.43 (61.7)	2.75 (69.9)	1.75 (44.5)	.87 (22.1)	.57 (14.5)	.42 (10.7)	5.1 (2.3)
CS1600S	.87 (22.1)	5.00 (127.0)	4.37 (111.0)	2.50 (63.5)	.62 (15.7)	1.37 (34.8)	3.62 (91.9)	.31 (7.9)	1.50 (38.1)	2.68 (68.1)	3.00 (76.2)	2.00 (50.8)	1.00 (25.4)	.57 (14.5)	.42 (10.7)	7.6 (3.5)

Millimeter equivalents for inch dimensions are shown in (**)

Subplate

Reference Data Only
(Subplates are not available)

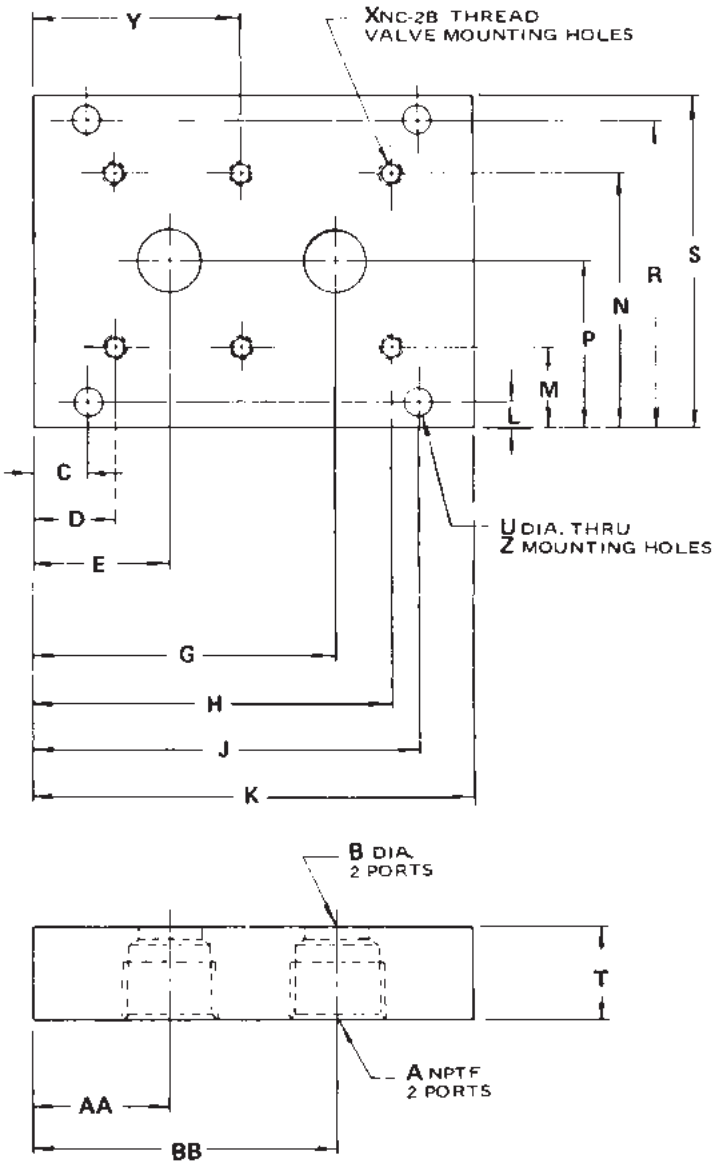

	Valve Numbers				
	CS 400	CS 600	CS 800	CS 1200	CS 1600
A	1/4"	3/8"	1/2"	3/4"	1"
B	.281 (7.1)	.406 (10.3)	.469 (11.9)	.656 (16.7)	.875 (22.2)
C	.375 (9.5)	.375 (9.5)	.500 (12.7)	.344 (8.7)	1.500 (38.1)
D	.562 (14.3)	.843 (21.4)	.875 (22.2)	.750 (19.1)	1.125 (28.6)
E	.750 (19.1)	1.000 (25.4)	1.031 (26.2)	1.188 (30.2)	1.875 (47.6)
G	1.750 (44.5)	2.000 (50.8)	2.219 (56.4)	3.328 (84.5)	4.125 (104.8)
H	1.938 (49.2)	2.156 (54.8)	2.375 (60.3)	3.750 (95.3)	4.875 (123.8)
J	2.125 (54.0)	2.625 (66.7)	2.750 (69.9)	4.156 (105.6)	4.500 (114.3)
K	2.50 (63.5)	3.00 (76.2)	3.25 (82.6)	4.50 (114.3)	6.00 (152.4)
L	.344 (8.7)	.250 (6.4)	.438 (11.1)	.344 (8.7)	.343 (8.7)
M	.844 (21.4)	.750 (19.1)	1.125 (28.6)	1.062 (27.0)	1.062 (27.0)
N	2.156 (54.8)	2.250 (57.2)	2.875 (73.0)	3.188 (81.0)	3.438 (87.3)
P	1.500 (38.1)	1.500 (38.1)	2.000 (80.8)	2.125 (54.0)	2.250 (57.2)
R	2.656 (67.5)	2.750 (69.9)	3.562 (90.5)	3.906 (99.2)	4.156 (105.6)
S	3.00 (76.2)	3.00 (76.2)	4.00 (101.6)	4.25 (108.0)	4.50 (114.3)
T	1.125 (28.6)	1.125 (28.6)	1.125 (28.6)	1.125 (28.6)	1.250 (31.8)
U	.281 (7.1)	.281 (7.1)	.359 (9.1)	.422 (10.7)	.422 (10.7)
X	1/4-20	1/4-20	1/4-20	5/16-18	5/16-18
Y	—	—	—	2.250 (57.2)	3.000 (76.2)
Z	4 Holes	4 Holes	4 Holes	6 Holes	6 Holes
AA	.750 (19.1)	1.000 (25.4)	1.031 (26.2)	1.188 (30.2)	1.875 (47.6)
BB	1.750 (44.5)	2.000 (50.8)	2.219 (56.4)	3.328 (84.5)	4.125 (104.8)

3000-C1.p65, dd

Parker Hannifin Corporation
Hydraulic Valve Division
Elyria, Ohio, USA

General Description

Series ECR adjustable check valves have an adjustable knob that allows the cracking pressure to be selected and locked at that rate by a jam nut. These valves allow flow in one direction and prevent flow in the opposite direction.

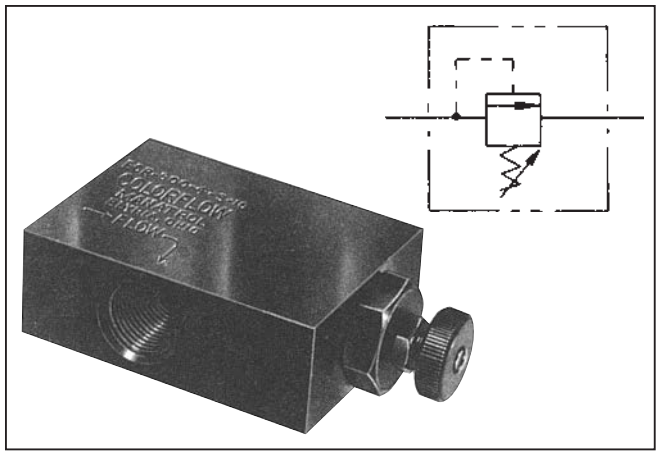

Features

- Can be utilized as a check valve with adjustable cracking pressure or as a low pressure direct spring relief valve.
- Valve may be ordered with one out of four adjustment ranges.

Specifications

Maximum Operating Pressure	210 Bar (3000 PSI)
Normal Cracking Pressure	0.3 - 1.4 Bar (5 - 20 PSI) 1.0 - 4.1 Bar (15 - 60 PSI) 3.8 - 6.9 Bar (55 - 100 PSI) 6.2 - 10.4 Bar (90 - 150 PSI)
Mounting	In-line in any position
Material	Steel

Flow Rates

Model Number	Port Size, In. NPTF	Flow, Max. GPM (L/M)
ECR400S	1/4"	6 (23)
ECR600S	3/8"	8 (30)
ECR800S	1/2"	12 (45)
ECR1200S	3/4"	27 (100)

Ordering Information

Example: "ECR600S4" means Model ECR, Size 600 (3/8" ports), steel, cracking range 4 (15-60 PSI), Standard seals.

ECR — Series

[ ] — Size

400	1/4" NPTF
600	3/8" NPTF
800	1/2" NPTF
1200	3/4" NPTF

S — Material

S	Steel

[ ] — Adjustment Range

Code No.	Pressure Range, PSI
2	5-20
4	15-60
6	55-100
8	90-150

[ ] — Seal Material

Omit	Nitrile
V	Fluorocarbon

3000-C1.p65, dd

Parker Hannifin Corporation
Hydraulic Valve Division
Elyria, Ohio, USA

C

Millimeter equivalents for inch dimensions are shown in (**)

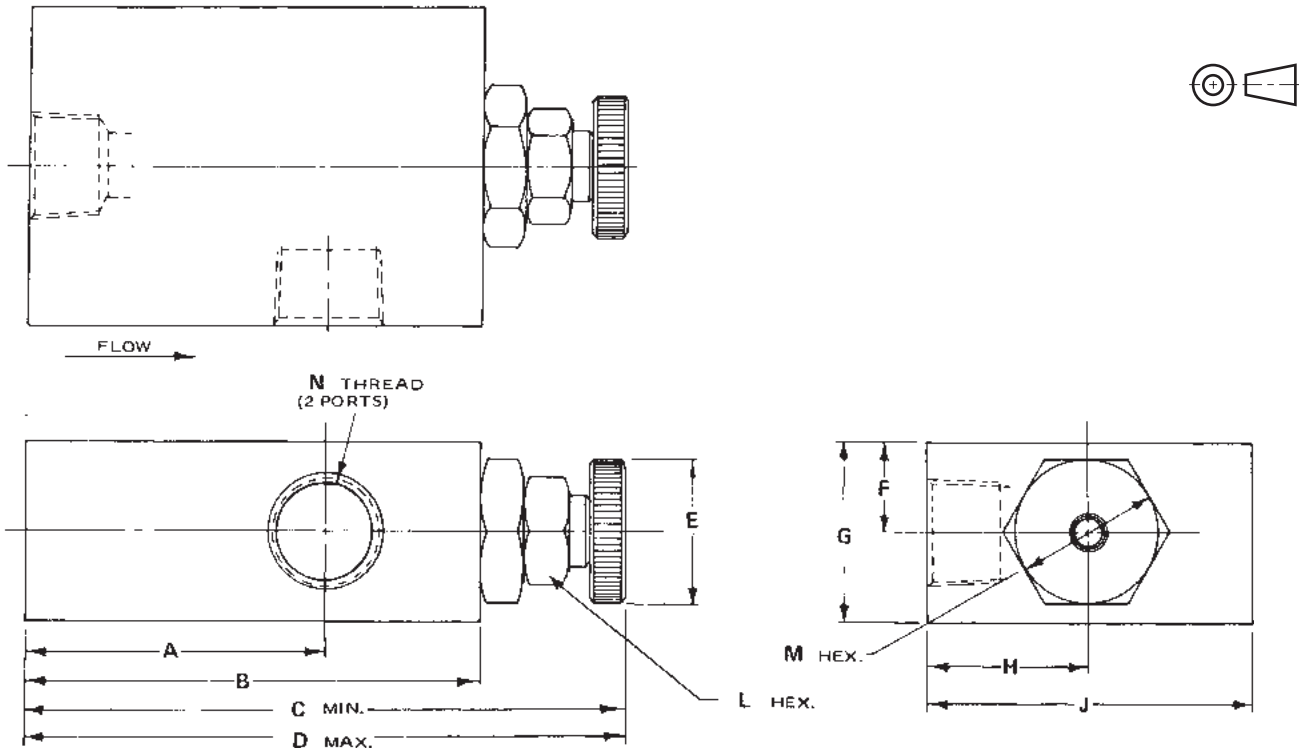

VALVE MODEL	A	B	C	D	E	F	G	H	J	L	M	N THREAD	WEIGHT LB. (Kg)
ECR400S	1.00 (25.4)	2.50 (63.5)	3.24 (82.3)	3.56 (90.4)	.75 (19.1)	.43 (10.9)	.87 (22.1)	.87 (22.1)	1.75 (44.5)	.50 (12.7)	.68 (17.3)	1/4 — 18 NPTF	1.1 (0.5)
ECR600S	1.78 (45.2)	2.75 (69.9)	3.63 (92.2)	3.96 (100.6)	.75 (19.1)	.50 (12.7)	1.00 (25.4)	1.00 (25.4)	2.00 (50.8)	.75 (19.1)	.87 (22.1)	3/8 — 18 NPTF	1.5 (0.7)
ECR800S	2.15 (54.6)	3.18 (80.8)	4.07 (103.3)	4.44 (112.8)	1.00 (25.4)	.62 (15.7)	1.25 (31.8)	1.12 (28.4)	2.25 (57.2)	.75 (19.1)	1.00 (25.4)	1/2 — 14 NPTF	2.4 (1)
ECR1200S	2.68 (68.1)	4.09 (103.9)	5.20 (132.1)	5.64 (143.3)	1.25 (31.8)	.87 (22.1)	1.75 (4451)	1.37 (34.8)	2.75 (69.9)	.93 (23.6)	1.25 (31.8)	3/4 — 14 NPTF	5.2 (2.5)

General Description

Series ICP pilot-operated check valves allow free flow in one direction, and prevent any flow in the opposite direction until the pilot is actuated, allowing the valve to open and permit flow in the reverse direction.

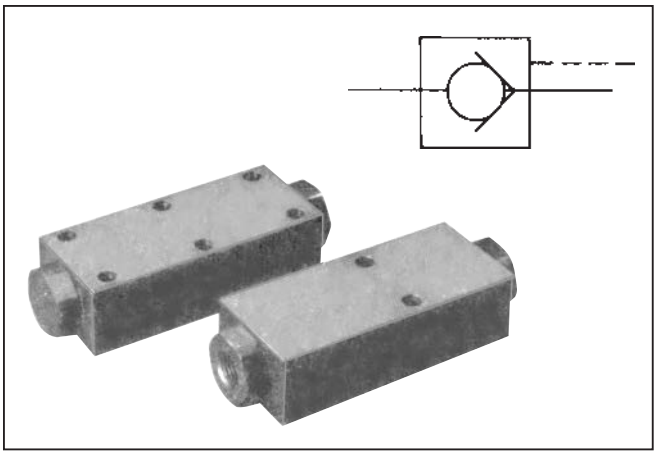

Features

- One of two poppet ratios may be selected.
- The -19 poppet is 2-stage, which helps eliminate shock. It permits the use of lower pilot pressures.

Specifications

Maximum Operating Pressure	210 Bar (3000 PSI)
Nominal Flow	30 LPM (8 GPM)
Maximum Flow	45 LPM (12 GPM)
Poppet Styles	Single stage: 3:1 area ratio Two stage, decompression: 19:1 area ratio
Mounting	In-line, in any position
Material	Steel

Ordering Information

Example: "ICP6003M—" means Model ICP, 3/8" NPTF 3:1 pilot piston area ratio, standard nitrile seal.

ICP — Check Valve Mounting

ICP	Inline Mounted

600 — Size

600	3/8" NPTF

S — Material

S	STEEL

[ ] — Poppet Ratio

3M	Solid Metal Poppet	3:1
19M	Solid Metal Poppet	19:1

[ ] — Seal Material

Omit	Nitrile
V	Fluorocarbon

C

Performance Curves

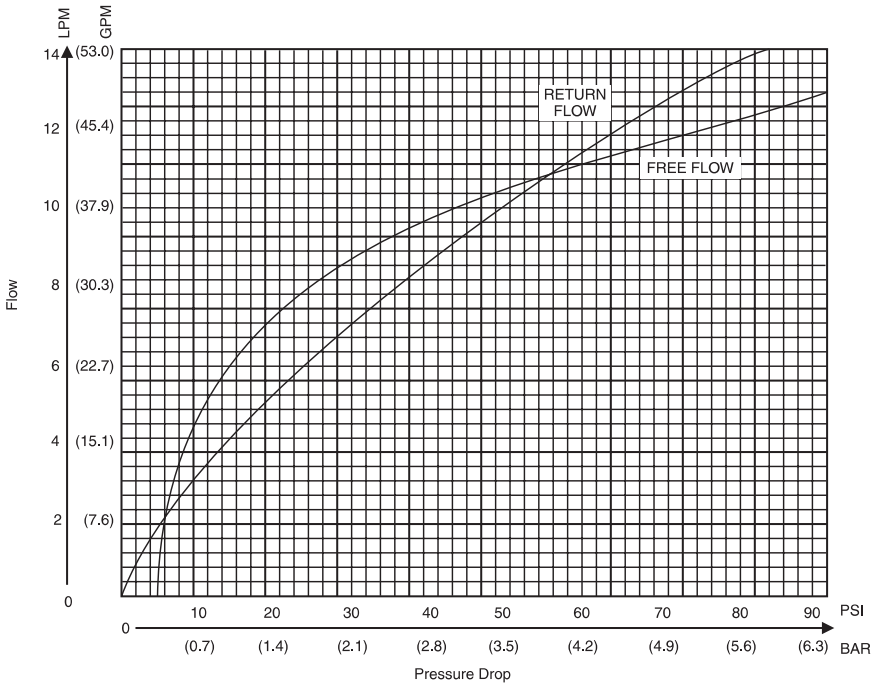

Flow vs. Pressure Drop

Dimensions

Millimeter equivalents for inch dimensions are shown in (**)

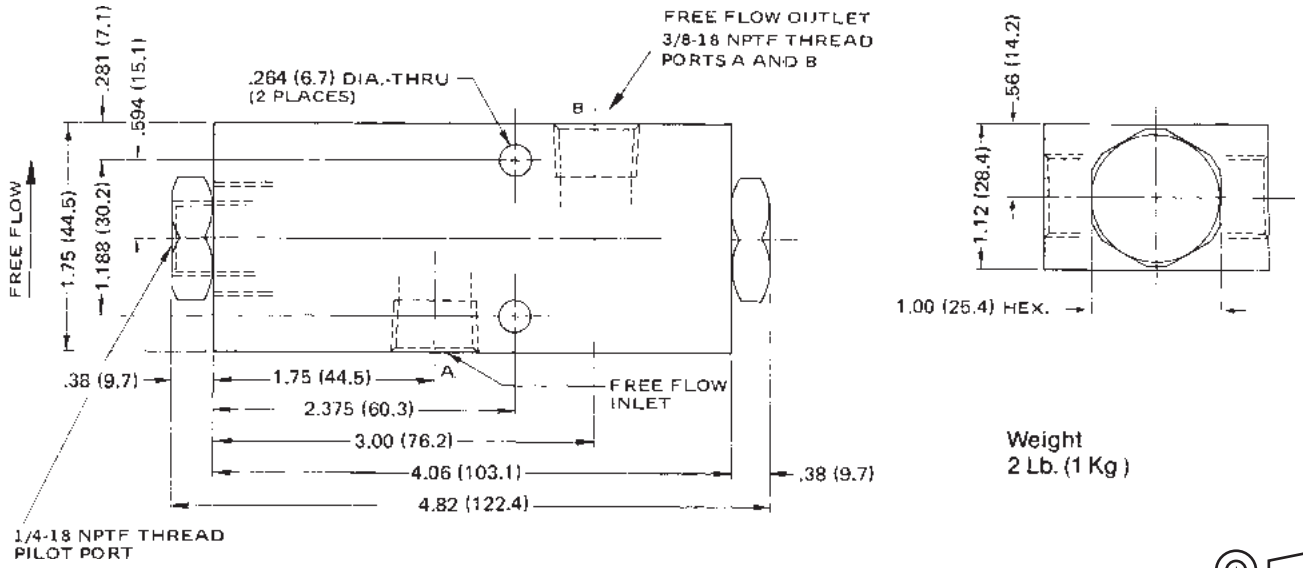

Valve Model	Port Size	Flow (Max) GPM (L/M)	△P @ Max Free Flow PSI (Bar)	△P @ Max Reverse Flow PSI (Bar)	Area Ratio	
					Pilot Piston Area To Decompression Poppet Area	Pilot Piston Area To Check Valve Area
ICP 600S3*	3/8 NPTF	12 (45.4)	78 (5.5)	60 (4.2)	—	3:1
ICP 600S19*	3/8 NPTF	12 (45.4)	78 (5.5)	60 (4.2)	19:1	3:1

3000-C1.p65, dd

Parker Hannifin Corporation
Hydraulic Valve Division
Elyria, Ohio, USA

Return to ALPHA TOC
Return to SECTION TOC

In-Line Mounted Flow Control Valves

General Description

Series 133, 135, 143 and S133, S135, S143 needle valves are capable of metering flow of a wide variety of liquids and gases. A soft seat design can be used when zero leakage is required.

Features

- Low-priced brass needle valves available in metal and soft seat designs.
- Special stem designs offer precision control of small volume flows.
- External pipe threaded ports are counterbored to accept solder-type tube fittings.
- Stops, prevents stems from being screwed out accidentally.
- In the soft seat type the resiliency of the captive thermoplastic nose assures positive shut-off.

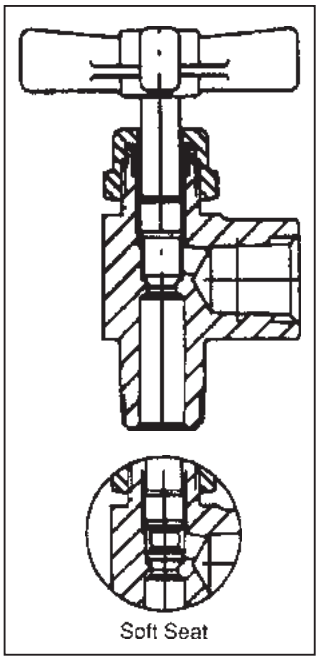

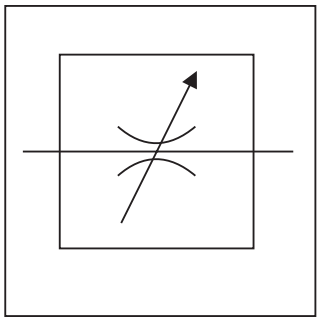

Specifications

Service Applications	133, 135, 143: Liquids S133, S135, S143: Gases and liquids
Maximum Operating Pressure	133, 135, 143: Working: 345 Bar (5000 PSI) Proof: 517.5 Bar (7500 PSI) Burst: 862.5 Bar (12,500 PSI) S133, S135, S143: 207 Bar (3000 PSI)
Sizes	NPT: 1/4
Ports	NPT: Pipe threads
Internal Leakage	Zero
Mounting	In-line or panel. Maximum panel thickness 1/2". Panel hole diameter 17/32".
Material	Body: Brass Cap: Brass Cap Washer: 316 Stainless Steel Locknut: Brass Stem: 303 or 316 Stainless Steel Stem Nose Soft Seat: Thermoplastic Washers: 304 Stainless Steel Packing: PTFE Handle: Aluminum alloy star (metal seat)
Operating Temperature	133, 135, 143: Brass: -54°C to 93°C (-65°F to 200°F) Consult factory for special temps. S133, S135, S143: Stainless Steel: -54°C to 93°C (-65°F to 200°F)

Performance Curves

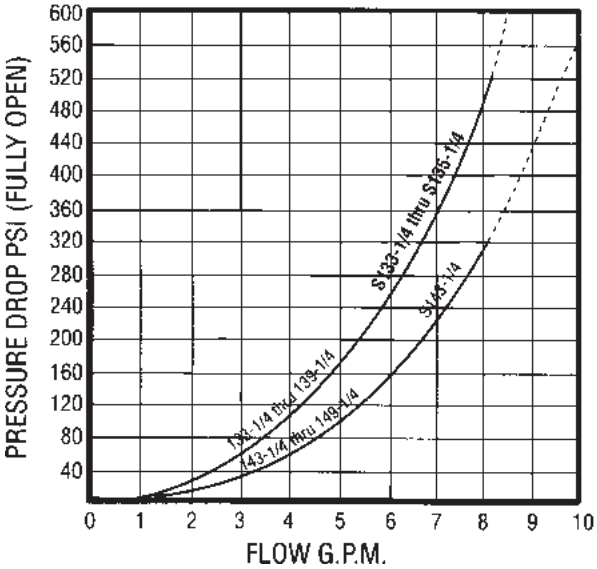

Size	CV Factors Inline	CV Factors Angle	Weights (Approx.)
1/4	.19	.37	.25 Lb.

3000-D1.p65, dd

Parker Hannifin Corporation
Hydraulic Valve Division
Elyria, Ohio, USA

Ordering Information

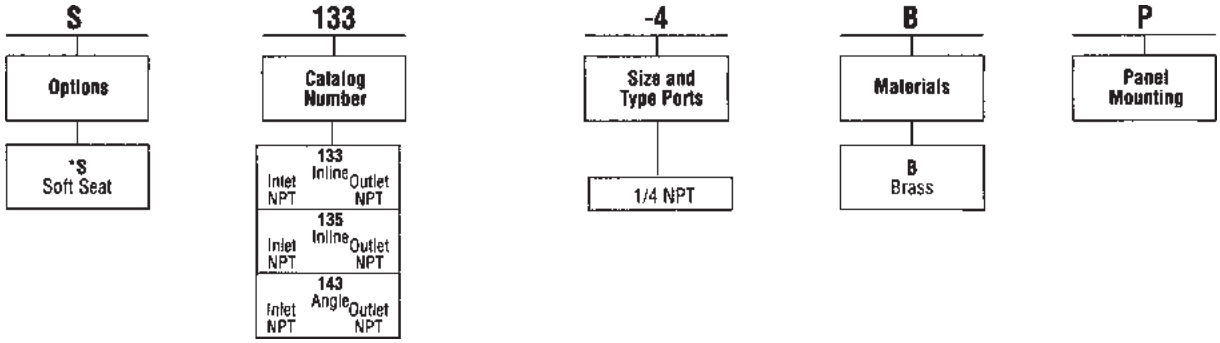

D

Dimensions

Dimensions are shown in inches

Handle and Centerline

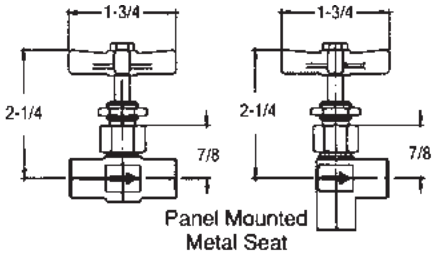

Flow Direction of Soft Seat is Reverse of Arrows Shown Below

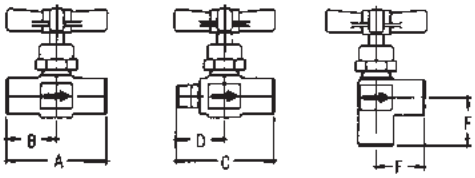

133 135 143

Dimensions Apply to Both Regular and Panel-Mounting Types, Metal and Soft Seat

Dash Number	Size Tube	Size Pipe	A	B	C	D	E	F	G	H	J
1/4	—	1/4	1-7/8	15/16	1-13/16	7/8	1-3/4	7/8	15/16	—	—

3000-D1.p65, dd

Parker Hannifin Corporation
Hydraulic Valve Division
Elyria, Ohio, USA

D

General Description

Series T143 and T148 toggle valves can be used on vacuum and gas applications. These toggle valves are used when quick, positive on-off action is required as well as zero leakage.

Features

- Zero leakage.
- Pneumatic or hydraulic service.
- Wide selection of fitting ends in both in-line & angle porting.
- External pipe threaded ports are counterbored to accept solder-type tube fittings.

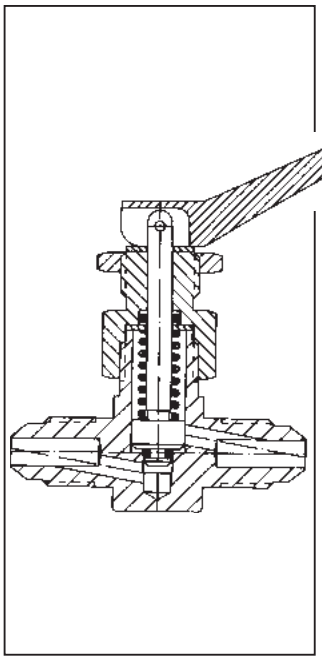

Specifications

Service App.	Gases and liquids
Maximum Operating Pressure	Working: 13.8 Bar (200 PSI) Proof: 20.7 Bar (300 PSI)
Ports	NPT: Pipe threads FLD: Flared tube connection SAE 37° MS33656
Internal Leakage	Zero
Mounting	Panel. Maximum panel thickness 1/4". Panel hole diameter 17/32".
Material	Body, Cap Stem, Locknut, Washers : Brass Handle: Nylon

Material (Cont'd)	Packing and Seat: Synthetic rubber Spring: AMS5673 Stainless Steel Spring pins: 420 Stainless Steel
Operating Temperature	-54°C to 121°C (-65°F to 250°F)

Ordering Information

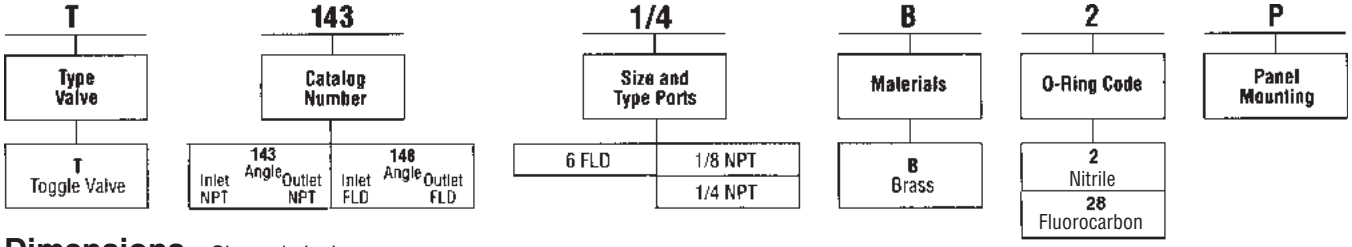

Dimensions – Shown in inches

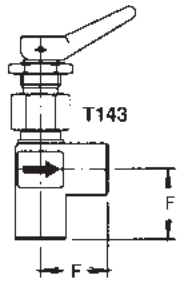

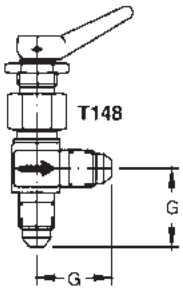

Handle and Centerline Dimensions

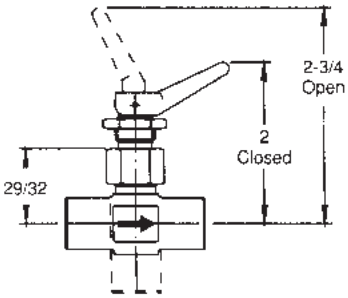

Dash No.	Size Tube	Size Pipe	A	B	C	D	E	F	G	H
1/8	—	1/8	1-3/4	7/8	—	27/32	1-11/16	7/8	—	—
1/4	—	1/4	1-7/8	15/16	1-13/16	7/8	1-3/4	7/8	—	—
6	3/8	—	—	—	—	15/16	1-7/8	—	31/32	7/8

Size	CV Factors Series 143	CV Factors Exceptions 148	Weight (In Lbs.)
1/8	.35	—	.13
1/4, 6	.40	.37	.25

3000-D1.p65, dd

Parker Hannifin Corporation
Hydraulic Valve Division
Elyria, Ohio, USA

General Description

Series 154 needle valves meter flow on systems with pressures up to 690 Bar (10,000 PSI).

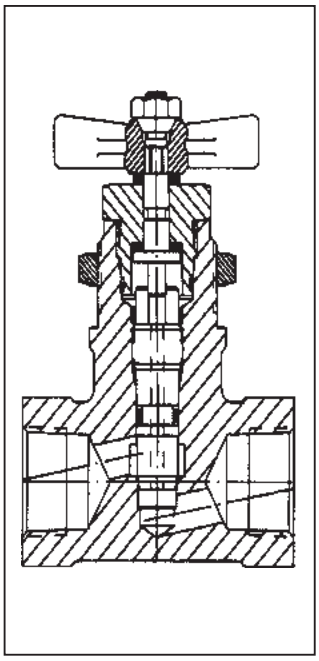

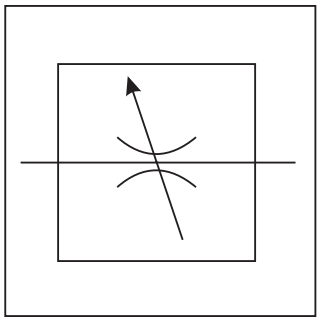

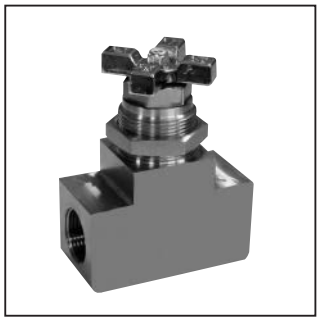

Specifications

Service App.	Water and Hydraulic Oil
Maximum Operating Pressure	Working: 690 Bar (10,000 PSI) Proof: 1035 Bar (15,000 PSI) Burst: 1725 Bar (25,000 PSI)
Sizes	Rising Stem type: IST: 4, 6, 8 Non-rising stem type: NPT: 1
Ports	NPT: Pipe threads IST: Internal straight threads (tube connection) AND10050 O-ring seal
Internal Leakage	Zero
Mounting	In-line or panel. Maximum panel thickness rising stem type 1/4"; Panel hole diameter 49/64". Non-rising stem type 3/4"; panel hole diameter 1-49/64"
Material	Body: 303 Stainless Steel Cap: 303 Stainless Steel Handle: 303 Stainless Steel Stem: 303 Stainless Steel Locknut: 303 Stainless Steel Packing Washer Follower: 303 Stainless Steel Stem: 440 Stainless Steel Stem Washers: Nylon O-rings: Synthetic Rubber Packing & Back-up rings: PTFE Handle: Aluminum alloy
Operating Temperature	Rising stem type: -54°C to 204°C (-65°F to 400°F) Non-rising stem type: -54°C to 107°C (-65°F to 225°F)

Features

- Forged stainless steel needle valve for 690 Bar (10,000 PSI) service.
- Pressure-balanced design and non-rising stem of 3/4" and 1" sizes greatly reduce torque requirements and increase packing life.

Size		CV Factor	Weight (Lbs.)
Tube	Pipe		
4	1/8	0.35	0.88
6	1/4	0.55	0.88
8	3/8	0.6	1.18

Performance Curves

Media - Hydraulic Oil
MIL-H-6083 @ 21°C - 32°C (70°F - 90°F)

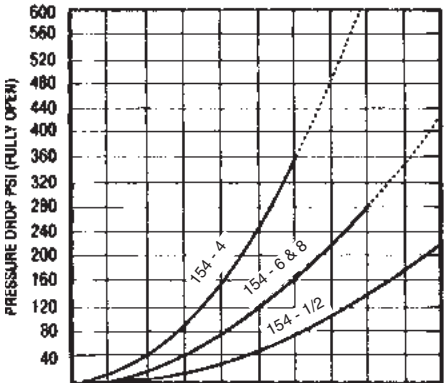

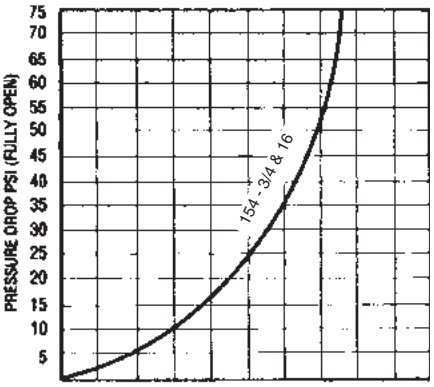

Ordering Information

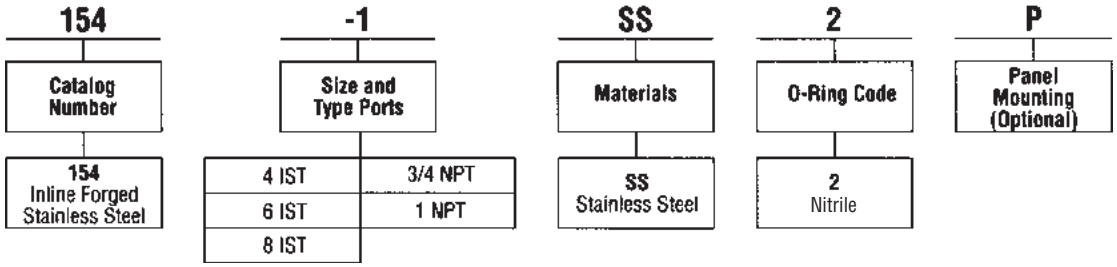

D

Dimensions

Shown in inches

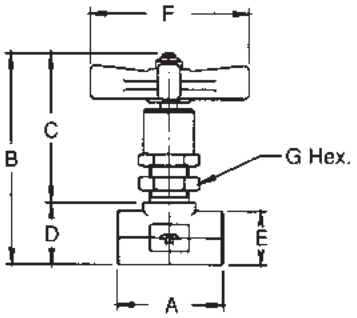

Rising Stem

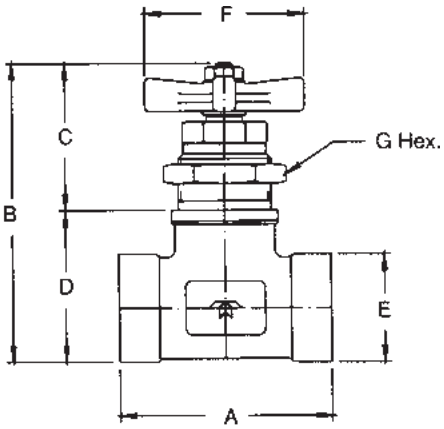

Non-Rising Stem

Valve Size	A	B Closed	C Open	C Closed	D	E	F	G Hex
3/4, 1	4	5-7/16	2-11/16	2-11/16	1-13/16	1-7/8		2
4, 6	1-7/8	3-61/64	3-7/64	2-51/64	21/32	1	3	1
8	2-3/8	4-27/64	3-9/64	2-53/64	29/32	1-3/8	3	1

Phase Out

General Description

Series 6611 flow divider or flow combiner valves provide division of flow from a pump into equal parts, normally used to divide flow from one pump to two actuators. The valve serves as a combiner in the reverse direction.

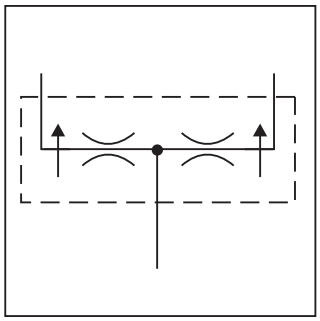

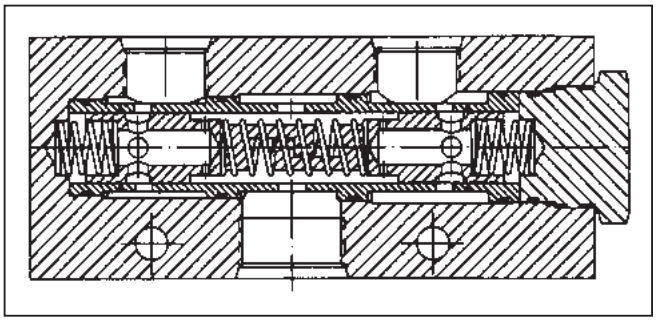

Specifications

Service App.	Hydraulic
Maximum Operating Pressure	Working: 207 Bar (3000 PSI) Proof: 310.5 Bar (4500 PSI) Burst: 517.5 Bar (7500 PSI)
Rated Flow Input	3/4" Size: 30.3 to 94.6 LPM (8 to 25 GPM) 1" Size: 53.0 to 151.4 LPM (14 to 40 GPM)
Ratio Division	50/50
Flow Accuracy	±10%
Ports	NPTF SAE
Material	Body and Retainer: Aluminum alloy All others: Steel, hardened O-rings: Synthetic Rubber Back-up rings: PTFE
Operating Temperature	-40°C to 107°C (-40°F to 225°F)

Features

- Provides division of flow from a pump into equal parts, notmally used to divide flow from one pump to two actuators.
- Serves as a combiner in the reverse direction.

Ordering Information

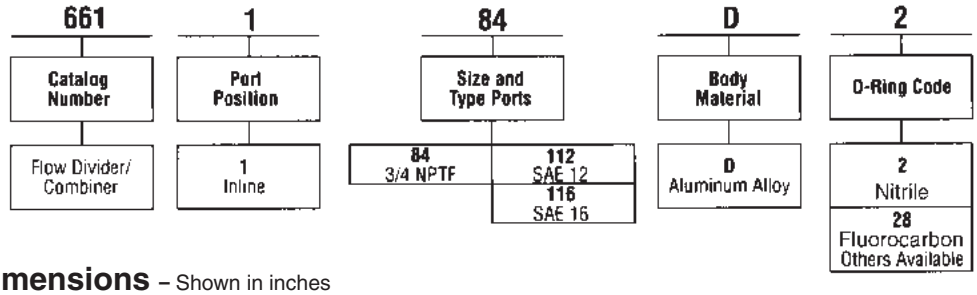

Weight:
3/4" to 1" Size 2 kg (4.44 lbs.)

Dimensions – Shown in inches

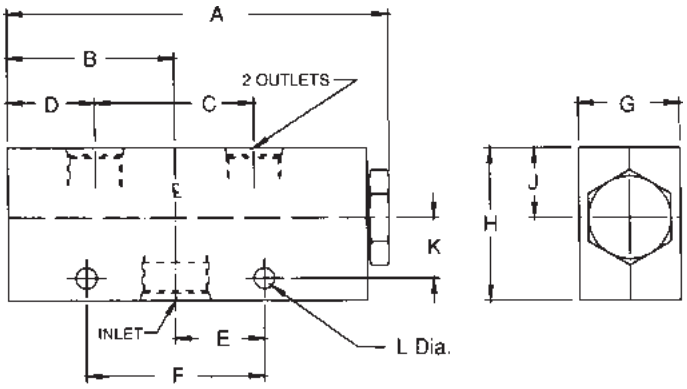

Catalog Number	Inlet Port	Outlet Port	A	B	C	D	E	F	G	H	J	K	L
6611-112D2	SAE 12	SAE 10	7-3/8	3-1/4	3-1/8	1-11/16	1-3/4	3-1/2	2	3	1-3/8	1-3/16	.406
6611-84D2	3/4 NPTF	1/2 NPTF											
6611-116D2	SAE 16	SAE 12											

General Description

Series FS flow control valves provide precise control of flow and shutoff in one direction, and automatically permit full flow in the opposite direction.

A two-step needle allows fine adjustment at low flow by using the first three turns of the adjusting knob; the next three turns open the valve to full flow, and also provide standard throttling adjustments.

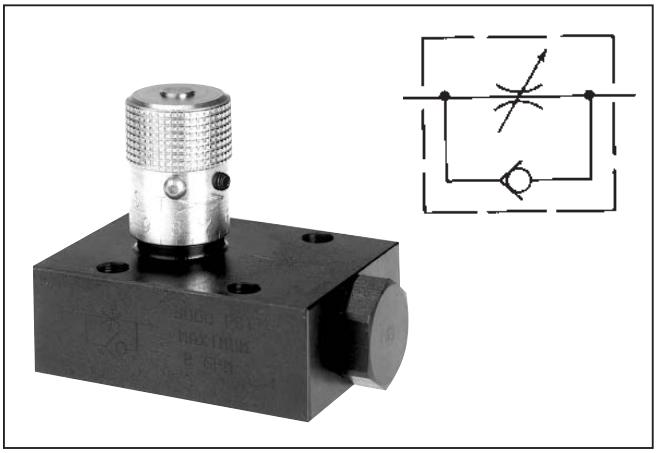

Features

- The exclusive "Colorflow" color-band reference scale on the valve stem is a great convenience and time-saver in setting the valve originally and in returning it to any previous setting.
- A simple set screw locks the valve on any desired setting.
- Stainless steel poppets are standard.

Specifications

Maximum Operating Pressure	210 Bar (3000 PSI)
Nominal Cracking Pressure	0.3 Bar (5 PSI) For return check poppet
Poppet Style	Solid metal poppet, steel
Needles	Standard needle on all models except: Fine needle option on FS400 and FS600

Flow Data

Model Number	Free Flow Rate, Max. GPM (LPM)	Free Flow Orifice Area in^2	Free Flow C_V	Orifice Area, Effective Control Flow, in^2	Effective Control Flow C_V	Port Size
FS400	5 (19)	0.068	1.56	.0194	.433	1/4
FS600	8 (30)	0.099	2.27	.0344	.787	3/8
FS800	15 (57)	0.224	5.11	.0427	.976	1/2
FS1200	25 (95)	0.348	7.95	.1080	2.470	3/4
FS1600	40 (151)	0.453	10.35	.2300	5.250	1

Return to ALPHA TOC
Return to SECTION TOC

FS		S			
Mounting	Size	Material	Needle Option	Knob Option	Seal Material

FS*	Subplate

* Steel only

400	1/4"
600	3/8"
800	1/2"
1200	3/4"
1600	1"

S	Steel

Omit	Standard
T	Tamperproof
F	Finger Screw

Omit	Standard
4	Fine*

*Models 400, 600

Omit	Standard Nitrile
V	Fluorocarbon

D

Bolt Kits To order bolt kits, specify bolt kit number

Valve	Bolt Kit	Bolt Specification*	Bolt Torque
FS400S	BK01	1/4-20 x 1-1/4"	13 Ft.-Lbs.
FS600S	BK02	1/4-20 x 1-1/2"	13 Ft.-Lbs.
FS800S	BK04	1/4-20 x 1-3/4"	13 Ft.-Lbs.
FS1200S	BK08	5/16-18 x 2-1/4"	27 Ft.-Lbs.
FS1600S	BK10	5/16-18 x 2-1/2"	27 Ft.-Lbs.

*Use SAE Grade 8 or Better.

D

"FS" Series 400 thru 800 Controlled Flow vs. Pressure Drop Needle Full Open

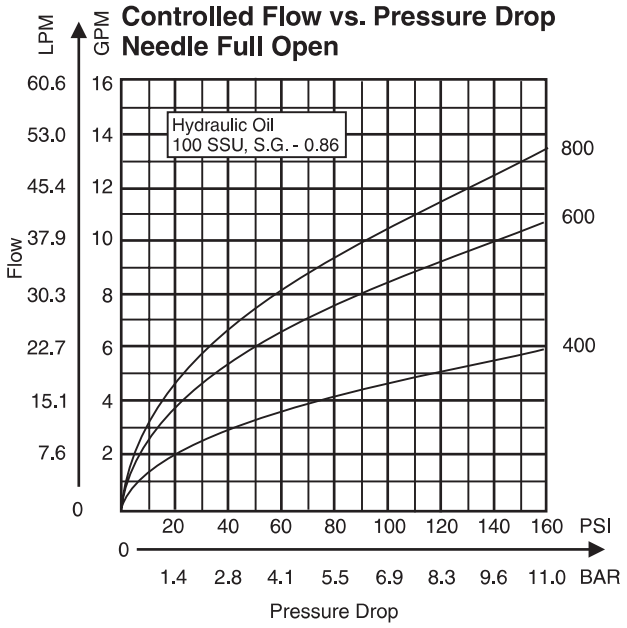

"FS" Series 1200 thru 1600 Controlled Flow vs. Pressure Drop Needle Full Open

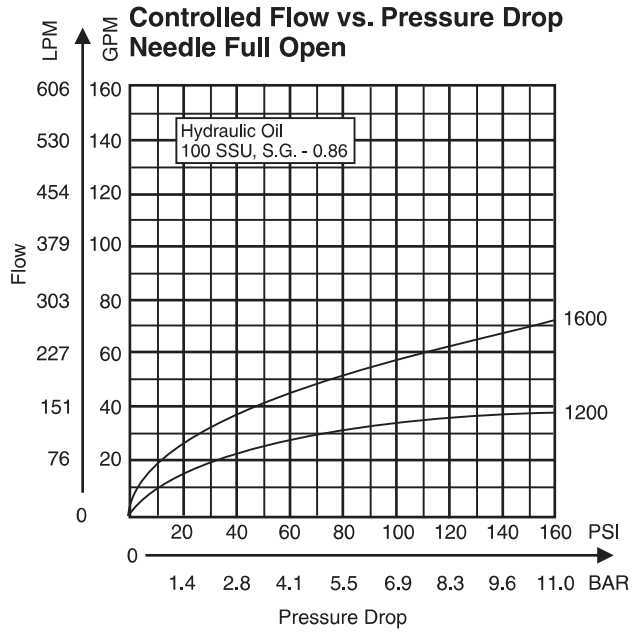

"FS" Series 400 thru 800 Free Flow vs. Pressure Drop Needle Full Closed

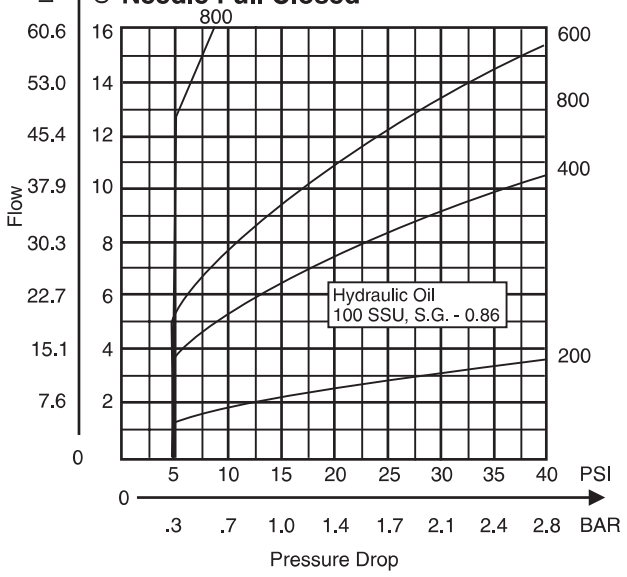

"FS" Series 1200 thru 1600 Free Flow vs. Pressure Drop Needle Full Closed

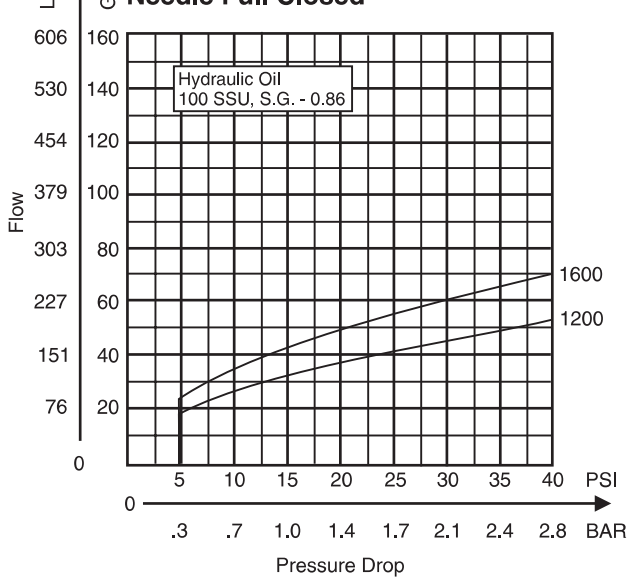

Millimeter equivalents for inch dimensions are shown in (**)

Models FS400 through FS 1600

Subplate mounted Flow Control Valves

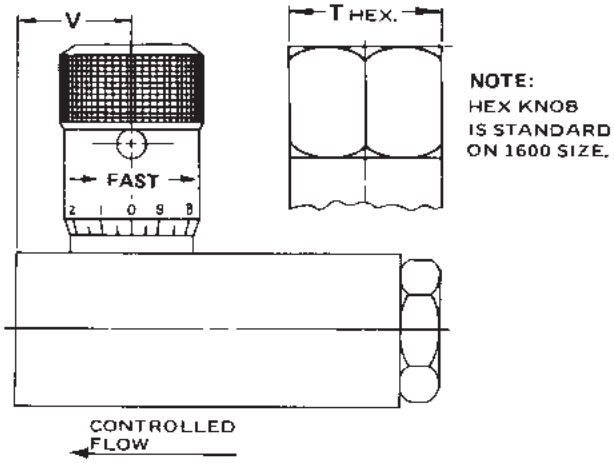

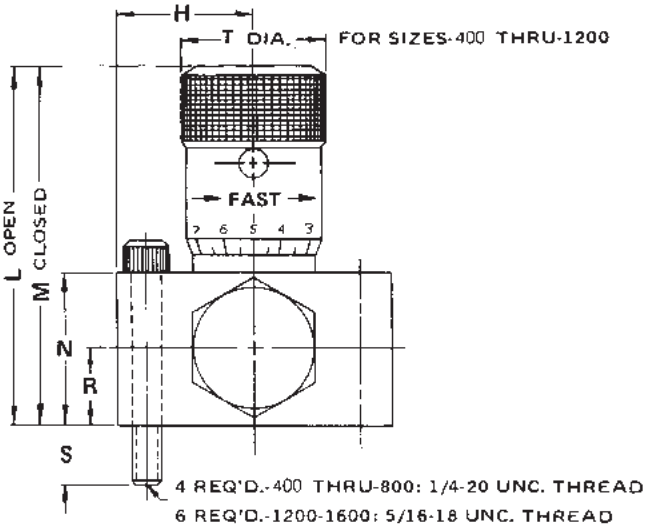

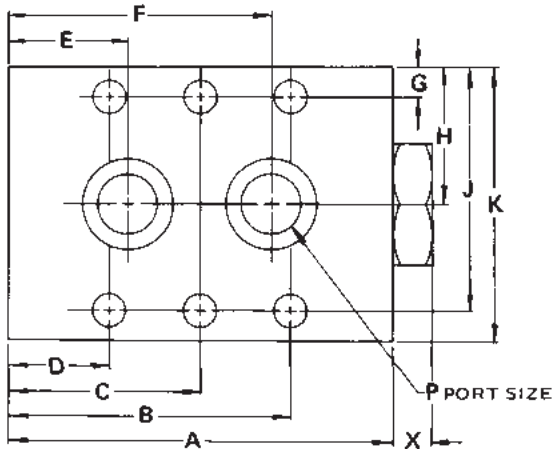

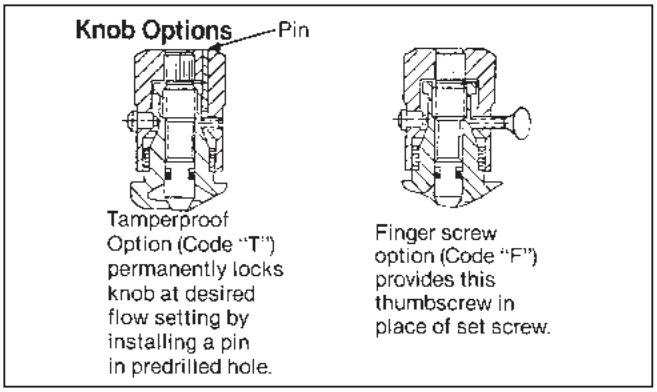

	Valve Model				
	FS400	FS600	FS800	FS1200	FS1600
A	2.50 (63.5)	2.75 (69.9)	3.19 (81.0)	4.09 (103.9)	5.00 (127.0)
B	1.94 (49.3)	2.03 (51 6)	2.34 (59.4)	3.55 (90.2)	4.38 (111.3)
C	—	—	—	2.05 (52.1)	2.50 (63.5)
D	.56 (14.2)	.72 (18.3)	.84 (21.3)	.55 (14.0)	.62 (15.7)
E	.75 (19.1)	.88 (22.4)	1.00 (25.4)	.99 (25.1)	1.38 (35.1)
F	1.75 (44.5)	1.88 (47.8)	2.19 (55.6)	3.12 (79.2)	3.62 (92.0)
G	.22 (5.6)	.25 (6.4)	.25 (6.4)	.31 (7.9)	.31 (7.9)
H	.88 (22.4)	1.00 (25.4)	1.12 (28.4)	1.38 (35.1)	1.50 (38.1)
J	1.53 (38.9)	1.75 (44.5)	2.00 (50.8)	2.44 (62.0)	2.69 (68.3)
K	1.75 (44.5)	2.00 (50.8)	2.25 (57.2)	2.75 (69.9)	3.00 (76.2)
L	2.21 (56.1)	2.65 (67.3)	3.29 (83.6)	4.35 (110.5)	5.76 (146.3)
M	2.01 (51.1)	2.40 (61.0)	3.00 (76.2)	3.76 (95.5)	5.10 (129.5)
N	.87 (22.1)	1.00 (25.4)	1.25 (31.8)	1.75 (44.5)	2.00 (50.8)
P	.28 (7.1)	.41 (10.4)	.47 (11.9)	.66 (16.8)	.88 (22.4)
R	.43 (10.9)	.50 (12.7)	.62 (15.7)	.87 (22.1)	1.00 (25.4)
S	.38 (9.7)	.50 (12.7)	.50 (12.7)	.50 (12.7)	.50 (12.7)
T	.81 (20.6)	1.00 (25.4)	1.18 (30.0)	1.37 (34.8)	1.87 (47.5)
V	.84 (21.3)	1.00 (25.4)	1.21 (30.7)	1.52 (38.6)	1.78 (45.2)
X	.31 (7.9)	.32 (8.1)	.32 (8.1)	.42 (10.7)	.42 (10.7)

D

3000-D1.p65, dd

Parker Hannifin Corporation
Hydraulic Valve Division
Elyria, Ohio, USA

Millimeter equivalents for inch dimensions are shown in (**)

Subplate

Models FS400 through FS1600

Reference Data Only
(Subplates are not available)

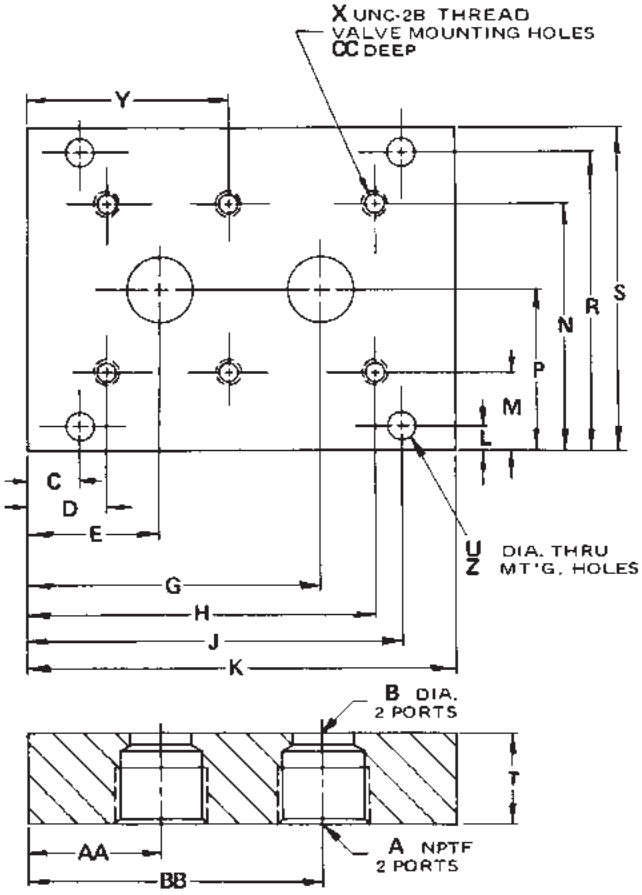

	Valve Numbers				
	FS 400	FS 600	FS 800	FS 1200	FS 1600
A	1/4″	3/8″	1/2″	3/4″	1″
B	.281 (7.1)	.406 (10.3)	.469 (11.9)	.656 (16.7)	.875 (22.2)
C	.375 (9.5)	.375 (9.5)	.500 (12.7)	.344 (8.7)	.344 (8.7)
D	.562 (14.3)	.843 (21.4)	.875 (22.2)	.750 (19.1)	1.125 (28.6)
E	.750 (19.1)	1.000 (25.4)	1.031 (26.2)	1.188 (30.2)	1.875 (47.6)
G	1.750 (44.5)	2.000 (50.8)	2.219 (56.4)	3.312 (84.1)	4.125 (104.8)
H	1.938 (49.2)	2.156 (54.8)	2.375 (60.3)	3.750 (95.3)	4.875 (123.8)
J	2.125 (54.0)	2.625 (66.7)	2.750 (69.9)	4.156 (105.6)	5.656 (143.7)
K	2.50 (63.5)	3.00 (76.2)	3.25 (82.6)	4.50 (114.3)	6.00 (152.4)
L	.344 (8.7)	.250 (6.4)	.438 (11.1)	.344 (8.7)	.344 (8.7)
M	.844 (21.4)	.750 (19.1)	1.125 (28.6)	1.062 (27.0)	1.062 (27.0)
N	2.156 (54.8)	2.250 (57.2)	2.875 (73.0)	3.188 (81.0)	3.438 (87.3)
P	1.500 (38.1)	1.500 (38.1)	2.000 (80.8)	2.125 (54.0)	2.250 (57.2)
R	2.656 (67.5)	2.750 (69.9)	3.562 (90.5)	3.906 (99.2)	4.156 (105.6)
S	3.00 (76.2)	3.00 (76.2)	4.00 (101.6)	4.25 (108.0)	4.50 (114.3)
T	1.125 (28.6)	1.125 (28.6)	1.125 (28.6)	1.125 (28.6)	1.250 (31.8)
U	.281 (7.1)	.281 (7.1)	.359 (9.1)	.422 (10.7)	.422 (10.7)
X	1/4-20	1/4-20	1/4-20	5/16-18	5/16-18
Y	—	—	—	2.250 (57.2)	3.000 (76.2)
Z	4	4	4	6	6
AA	.750 (19.1)	1.000 (25.4)	1.031 (26.2)	1.188 (30.2)	1.875 (47.6)
BB	1.750 (44.5)	2.000 (50.8)	2.219 (56.4)	3.312 (84.5)	4.125 (104.8)
CC	.505 (12.8)	.525 (13.3)	.525 (13.3)	.525 (13.3)	.525 (13.3)

General Description

Series PC*MS presssure compensated flow control valves are designed to regulate flow at a selected rate, then maintain this flow constant within ±5% as inlet and outlet pressures vary. However, changes in fluid temperature will prevent flow from holding constant.

Series PCMS valves can be adjusted for required flows after being installed.

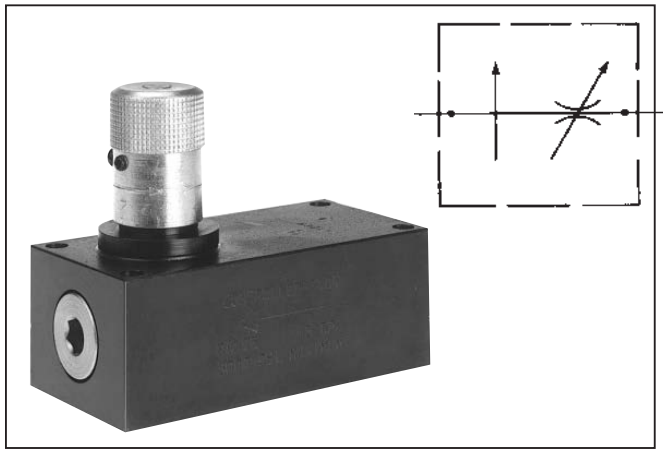

Features

- Available with reverse flow check.
- The exclusive “Colorflow” color-band reference scale on the valve stem is a great convenience and time-saver in setting the valve originally and in returning it to any previous setting.
- A simple set screw locks the valve on any desired setting.

Specifications

Service App.	Meter-in/meter-out and bleedoff circuits
Maximum Operating Pressure	210 Bar (3000 PSI)
Minimum Pressure Inlet / Outlet Differential	7 Bar (100 PSI) for sizes 1/4" and 3/8" 11 Bar (150 PSI) for sizes 1/2" through 1" Reverse-flow check valve optional

D

Flow Data

Valve Model	Flow		Reverse Flow, max. thru check, GPM (LPM)	Pressure Drop ΔP at max. Reverse Flow thru check, PSI (Bar)	Mounting	Port Size, in.
	Minimum GPM (LPM)	Maximum GPM (LPM)				
PC*MS400S	0.3 (1)	3.0 (11)	5 (19)	40 (3)	Subplate	1/4
PC*MS600S	0.6 (2)	6.0 (23)	8 (30)	40 (3)	Subplate	3/8
PC*MS800S	1/5 (6)	15.0 (57)	20 (76)	114 (8)	Subplate	1/2
PC*MS1200S	2.5 (10)	25.0 (95)	35 (132)	120 (8)	Subplate	3/4
PC*MS1600S	5.0 (19)	50.0 (189)	60 (227)	140 (10)	Subplate	1

* For optional reverse-flow check, insert “C” in model number at asterisk (*).

Return to ALPHA TOC
Return to SECTION TOC

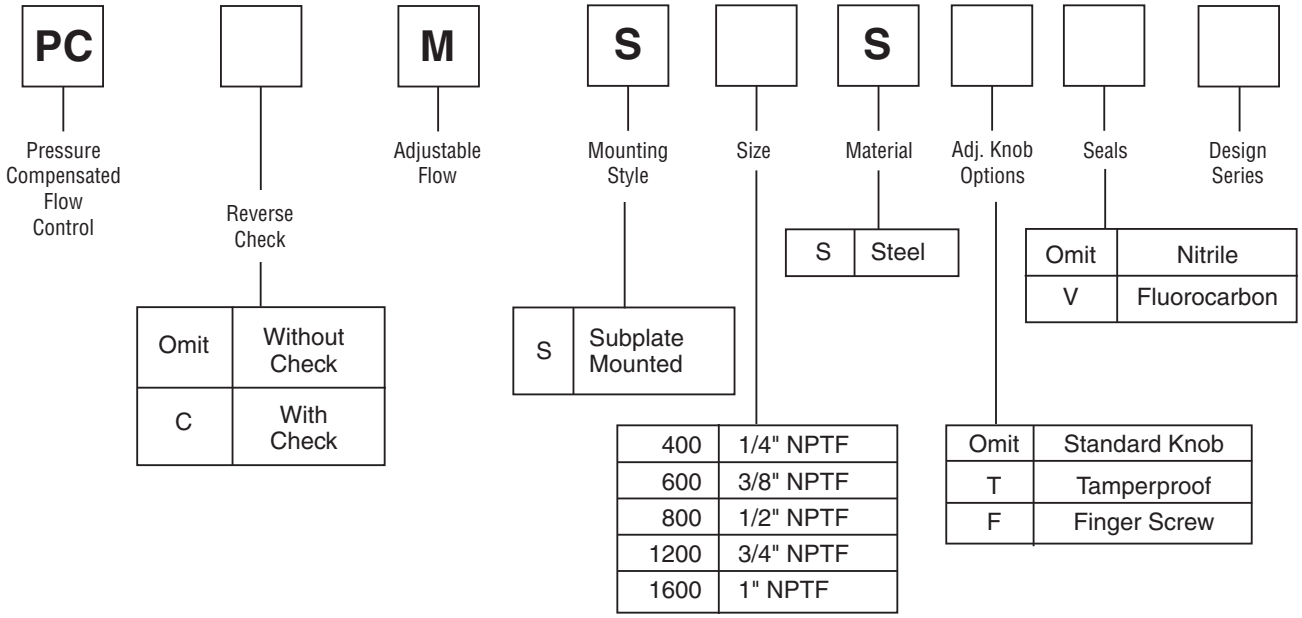

D

Bolt Kits

Valve No.	Bolt Kit	Bolts (SAE8 or better)	Torque (ft. lb.)
PCMS400S	BK02	1/4-20 x 1-1/2	15
PCMS600S	BK04	1/4-20 x 1-3/4	15
PCMS800S	BK60	1/4-20 x 2-1/4	15
PCMS1200S	BK25	5/16-18 x 2-3/4	30
PCMS1600S	BK46	5/16-18 x 3-1/4	30

PCMS Series
Controlled Flow vs. Pressure Drop
Typical For All Sizes
100 SSU, Hydraulic Oil, S.G. = 0.86

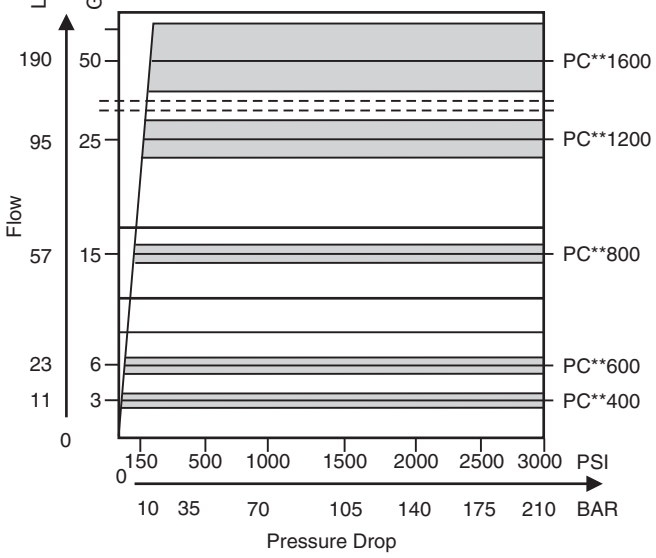

PCCMS 800 & 1600 Series
Reverse Flow vs. Pressure Drop
At Maximum & Minimum Flow Settings
100 SSU, Hydraulic Oil, S.G. = 0.86

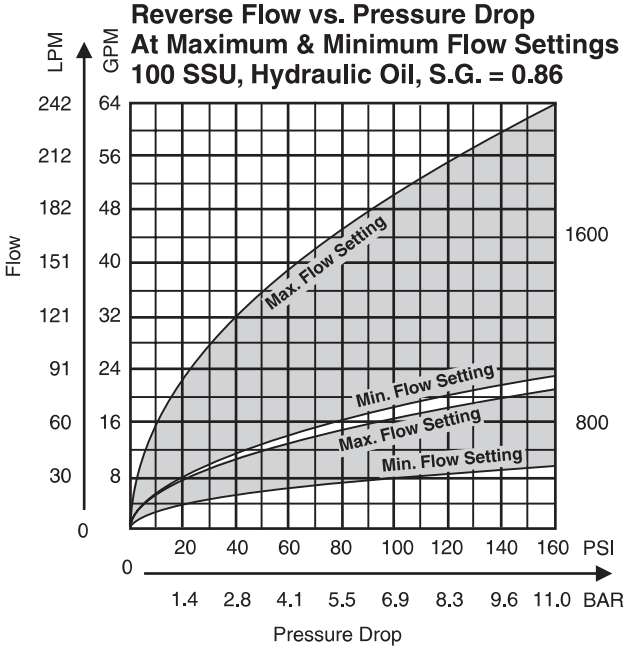

PCCMS 400, 600, & 1200 Series
Reverse Flow vs. Pressure Drop
At Maximum & Minimum Flow Settings
100 SSU, Hydraulic Oil, S.G. = 0.86

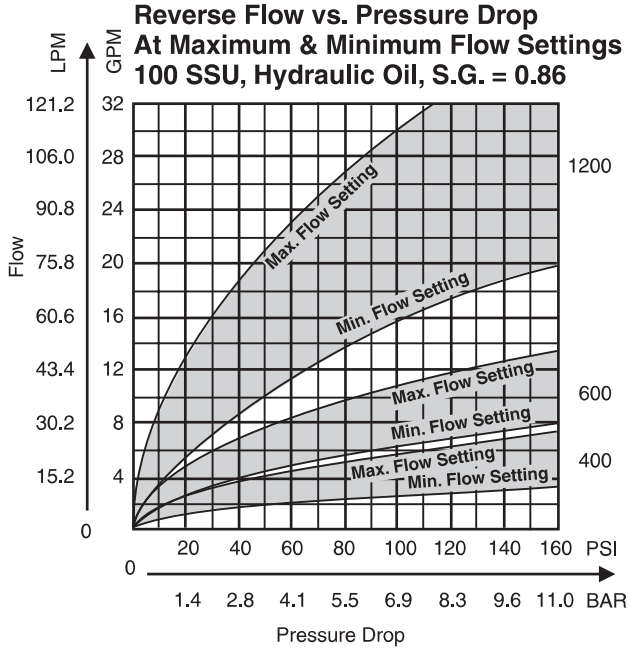

D

3000-D1.p65, dd

Parker Hannifin Corporation
Hydraulic Valve Division
Elyria, Ohio, USA

D

Millimeter equivalents for inch dimensions are shown in (**)

Model PCMS400S thru PCMS 1600S

Manifold mounted, pressure compensated Flow Control Valves

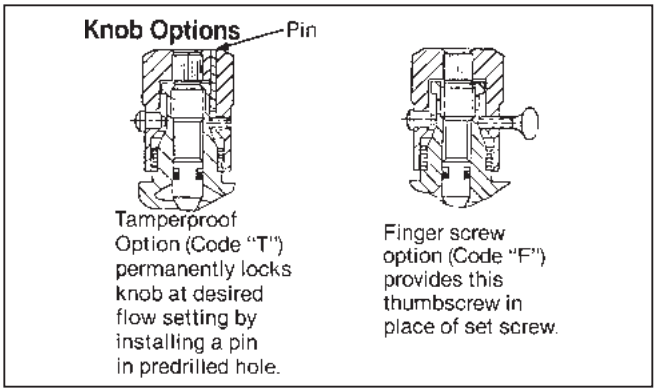

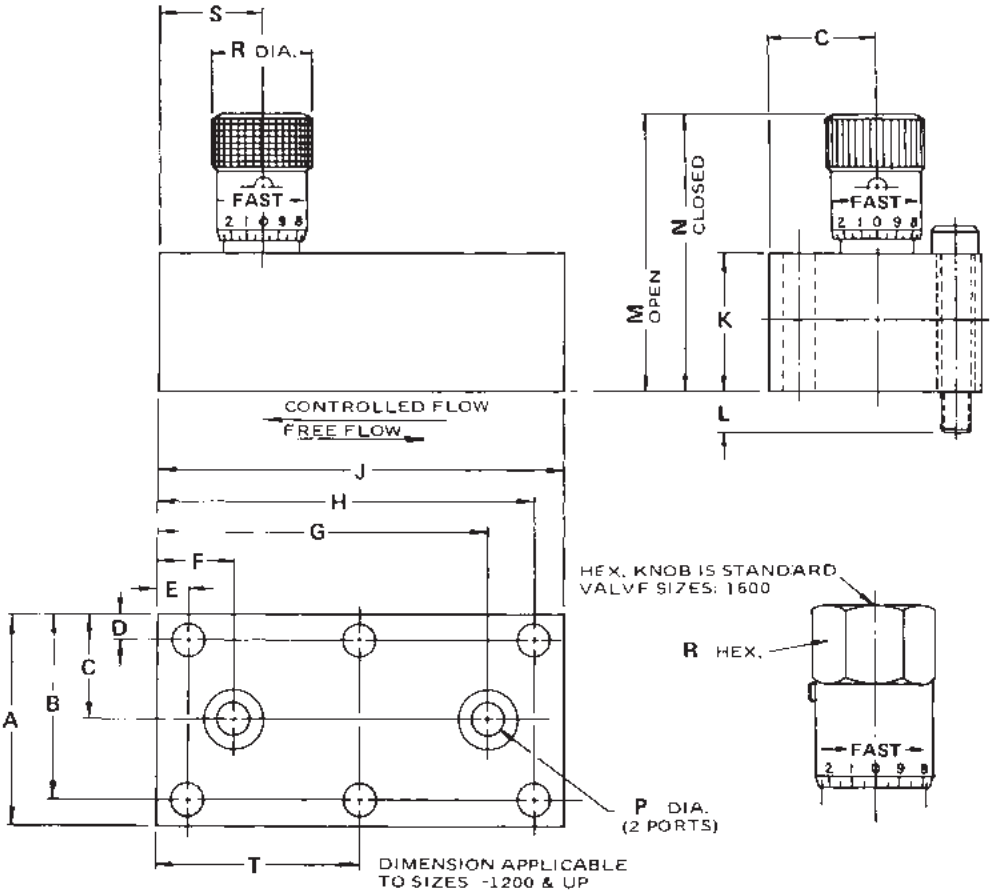

Valve Model	A	B	C	D	E	F	G	H	J	K	L	M	N	P	R	S	T
PC*MS400S	1 75 (44.5)	1 53 (38.9)	.88 (22 4)	22 (5 6)	.25 (6.4)	62 (15.7)	2 75 (69.9)	3 12 (79 2)	3 38 (85 9)	1.12 (28 4)	.38 (9.7)	2.47 (62.7)	2.27 (57 7)	.28 (7.1)	.81 Dia. (20.6)	84 (21.3)	—
PC*MS600S	2 00 (50.8)	1 75 (44 5)	1 00 (25 4)	25 (6 4)	.25 (6 4)	66 (16 8)	3 34 (84 8)	3 75 (95 3)	4 00 (101 6)	1 25 (31 8)	.50 (12 7)	2.89 (73 4)	2.67 (67 8)	.34 (8.6)	1.00 Dia. (25.4)	1.00 (25.4)	—
PC*MS800S	2.25 (57.2)	2 00 (50 8)	1.12 (28 4)	.25 (6 4)	25 (6 4)	75 (19 1)	3 88 (98 6)	4 38 (111 3)	4.62 (117 3)	1.75 (44 5)	.50 (12 7)	4.04 (102 6)	3.74 (95 0)	47 (11 9)	1.19 Dia. (30 2)	1.75 (44.5)	—
PC*MS1200S	2 75 (69 9)	2 44 (62 0)	1.38 (35 1)	.31 (7 9)	38 (9 7)	1 00 (25 4)	4 62 (117 3)	5 25 (133 4)	5 62 (142 7)	2.25 (57.2)	50 (12.7)	5 06 (128.5)	4 56 (115.8)	66 (16.8)	1 38 Dia. (35.1)	1.59 (40.4)	2.81 (71.4)
PC*MS1600S	3 00 (76 2)	2 69 (68 3)	1.50 (38 1)	31 (7.9)	50 (12 7)	1 25 (31 8)	5 50 (139 7)	6 25 (158 8)	6.75 (171 5)	2.75 (69.9)	.50 (12 7)	6.90 (175 3)	6 23 (158.2)	88 (22.4)	1 88 Hex. (47.8)	1.94 (49 3)	3.38 (85 9)

3000-D1.p65, dd

Parker Hannifin Corporation
Hydraulic Valve Division
Elyria, Ohio, USA

Millimeter equivalents for inch dimensions are shown in (**)

Subplate

Reference Data Only
(Subplates are not available)

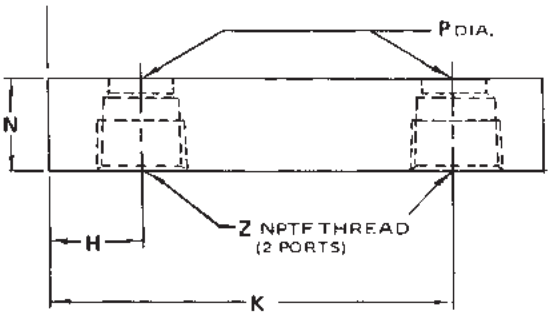

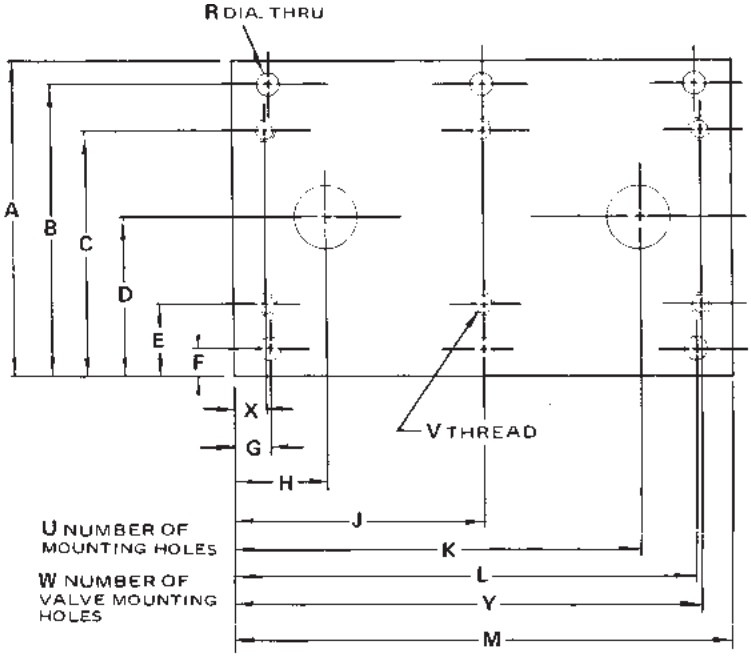

Valve Model		PCMS400S	PCMS600S	PCMS800S	PCMS 1200S	PCMS 1600S
N.P.T.F. Port Size		1/4—18	3/8—18	1/2—14	3/4—14	1—11-1/2
	A	2.75 (69.9)	3.00 (76.2)	3.50 (88.9)	4.00 (101.6)	4.50 (114.3)
	B	2.500 (63.5)	2.750 (69.9)	3.188 (81.0)	3.688 (93.7)	4.125 (104.8)
	C	2.031 (51.6)	2.250 (57.2)	2.625 (66.7)	3.062 (77.8)	3.438 (87.3)
	D	1.375 (34.9)	1.500 (38.1)	1.750 (44.5)	2.000 (50.8)	2.250 (57.2)
	E	.719 (18.3)	.750 (19.1)	.875 (22.2)	.938 (23.8)	1.062 (27.0)
	F	.250 (6.4)	.250 (6.4)	.312 (7.9)	.312 (7.9)	.375 (9.5)
	G	.250 (6.4)	.250 (6.4)	.312 (7.9)	.375 (9.5)	.500 (12.7)
	H	.625 (15.9)	.656 (16.7)	.750 (19.1)	1.000 (25.4)	1.250 (31.8)
	J	—	—	—	2.812 (71.4)	3.375 (85.7)
	K	2.750 (69.9)	3.344 (84.9)	3.875 (98.4)	4.625 (117.5)	5.500 (139.7)
	L	3.125 (79.4)	3.750 (95.3)	4.312 (109.5)	5.250 (133.4)	6.250 (168.3)
	M	3.375 (85.7)	4.000 (101.6)	4.625 (117.5)	5.625 (142.9)	6.750 (171.5)
	N	1.125 (28.6)	1.125 (28.6)	1.125 (28.6)	1.125 (28.6)	1.125 (28.6)
	P	.281 (7.1)	.343 (8.7)	.468 (11.9)	.656 (16.7)	.875 (22.2)
	R	.281 (7.1)	.281 (7.1)	.359 (9.1)	.359 (9.1)	.422 (10.7)
	U	4	4	4	6	6
	V	1/4—20	1/4—20	1/4—20	5/16—18	5/16—18
	W	4	4	4	6	6
	X	.250 (6.4)	.250 (6.4)	.250 (6.4)	.375 (9.5)	.500 (12.7)
	Y	3.125 (79.4)	3.750 (95.3)	4.375 (111.1)	5.250 (133.4)	6.250 (168.3)
	Z	1/4—18	3/8—18	1/2—14	3/4—14	1—11-1/2

3000-D1.p65, dd

Parker Hannifin Corporation
Hydraulic Valve Division
Elyria, Ohio, USA

General Description

Series TPC valves are pressure compensated and are insensitive to variations in oil temperature. These valves are ideal for use on meter-in, meter-out or bleed-off circuits.

Features

- Maintains constant flow with changing inlet and outlet pressures. Minimum pressure differential between inlet and outlet ports must be 100 PSI (7 Bar) for Model TPC600 to function properly; 150 PSI (10.5 Bar) for Model TPC1200.
- Maintains flow setting within approximately ±5% variation over pressure drop range 100 to 3000 PSI (7 to 210 Bar).
- Optional reverse flow check valves available on Models TPCC600 and TPCC1200; check valve cracking pressure is 5 PSI (0.4 Bar).
- Insensitivity to oil temperature change allows constant flow rate over a wide change of fluid temperature.
- Optional lunge control available on Model TPC600 to limit compensator piston travel. This control prepositions the compensator piston to minimize actuator lunge.

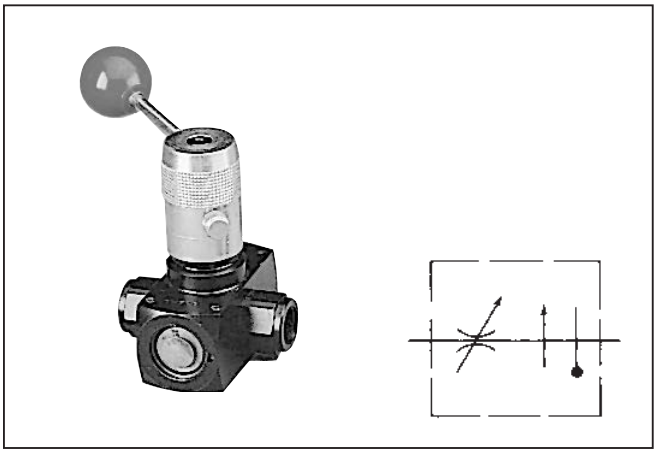

Specifications

Maximum Operating Pressure	3000 PSI (210 Bar)
Pressure Compensation	TPC600 100 PSI (7 Bar) Minimum TPC1200 150 PSI (10.5 Bar)
Flow Setting	±5% 100 to 3000 PSI (7 to 210 Bar)

Quick Reference Data Chart

Valve Model	Flow (max.) GPM (L/M)	Reverse Flow (max.) (thru check) GPM (L/M)	Pressure Drop ΔP at max. (reverse flow thru check) PSI (Bar)	Mounting	Port Size, in.
TPC600	6(23)	12 (45)	40 (3)	In-line	3/8 NPTF
TPCS600	6 (23)	—	—	Subplate	3/8
TPC1200	25 (95)	35 (133)	40 (3)	In-line	3/4 NPTF

Needle Flow Chart

FLOW RANGES — TPC600			TEMPERATURE COMPENSATION RANGE (For an 80-220 SSU viscosity change)	
Needle Number	Min. Flow	Max. Flow	Flow Range	% Flow Variation
01	5 CIPM (81.96 CC/M)	25 CIPM (410 CC/M)	5-25 CIPM (82-410 CC/M)	± 5%
02	5 CIPM (81.96 CC/M)	50 CIPM (820 CC/M)	5-50 CIPM (82-820 CC/M)	± 5%
06	5 CIPM (81.96 CC/M)	140 CIPM (2300 CC/M)	5-139 CIPM (82-2279 CC/M) 51-140 CIPM (836-2295 CC/M)	± 5% ± 3%
3	0.06 GPM (.22 L/M)	3 GPM (12 L/M)	0.1-1.0 GPM (.4-4 L/M) 1.0-3.0 GPM (4-8 L/M)	± 5% ± 3%
6	0.12 GPM (.45 L/M)	6 GPM (23 L/M)	0.1-1.9 GPM (.4-8 L/M) 2.0-4.0 GPM (8-15 L/M) 4.0-6.0 GPM (8-23 L/M)	± 5% ± 4% ± 3%
TPC1200				
28	0.1 GPM (.4 L/M)	25 GPM (95 L/M)	1.0-3.0 GPM (.4-8 L/M) 3.0-8.0 GPM (8-30 L/M) 8.0-25 GPM (30-95 L/M)	± 7% ± 5% ± 3%

3000-D1.p65, dd

Parker Hannifin Corporation
Hydraulic Valve Division
Elyria, Ohio, USA

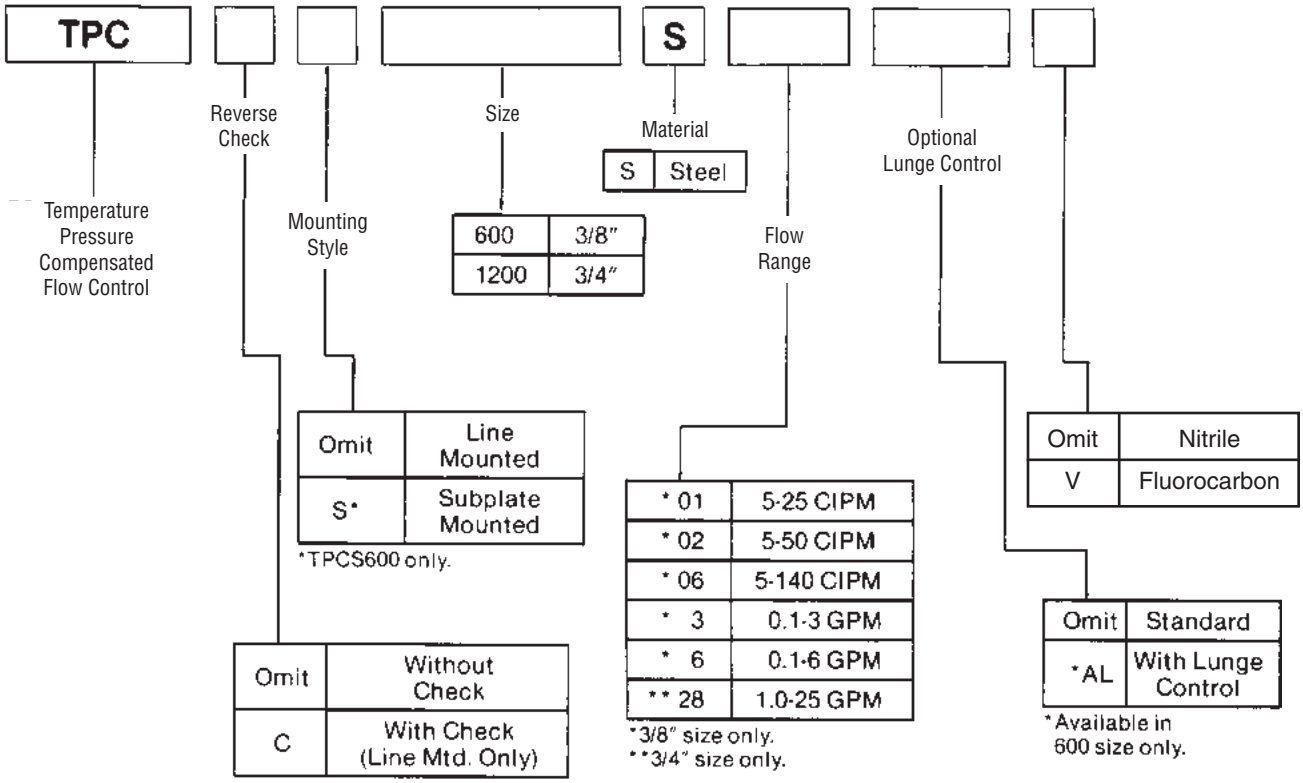

NOTE: See Needle Flow Chart in Engineering Performance section for flow information.

Example: "TPCC600S02ALV" means Series TPC Valve, with reverse-flow check valve, in-line mounting size 3/8", flow range of 5 to 50 CIPM, lunge control option, Fluorocarbon seals.

Bolt Kits

TPCS600	Bolt Kit No. BK07	Bolt specification 5/16" - 18 x 1"	Bolt torque 19 ft. lb.

D

Millimeter equivalents for inch dimensions are shown in (**)

Model TPCC600S

In-line mounted, pressure compensated, temperature insensitive
Flow Control Valve with check

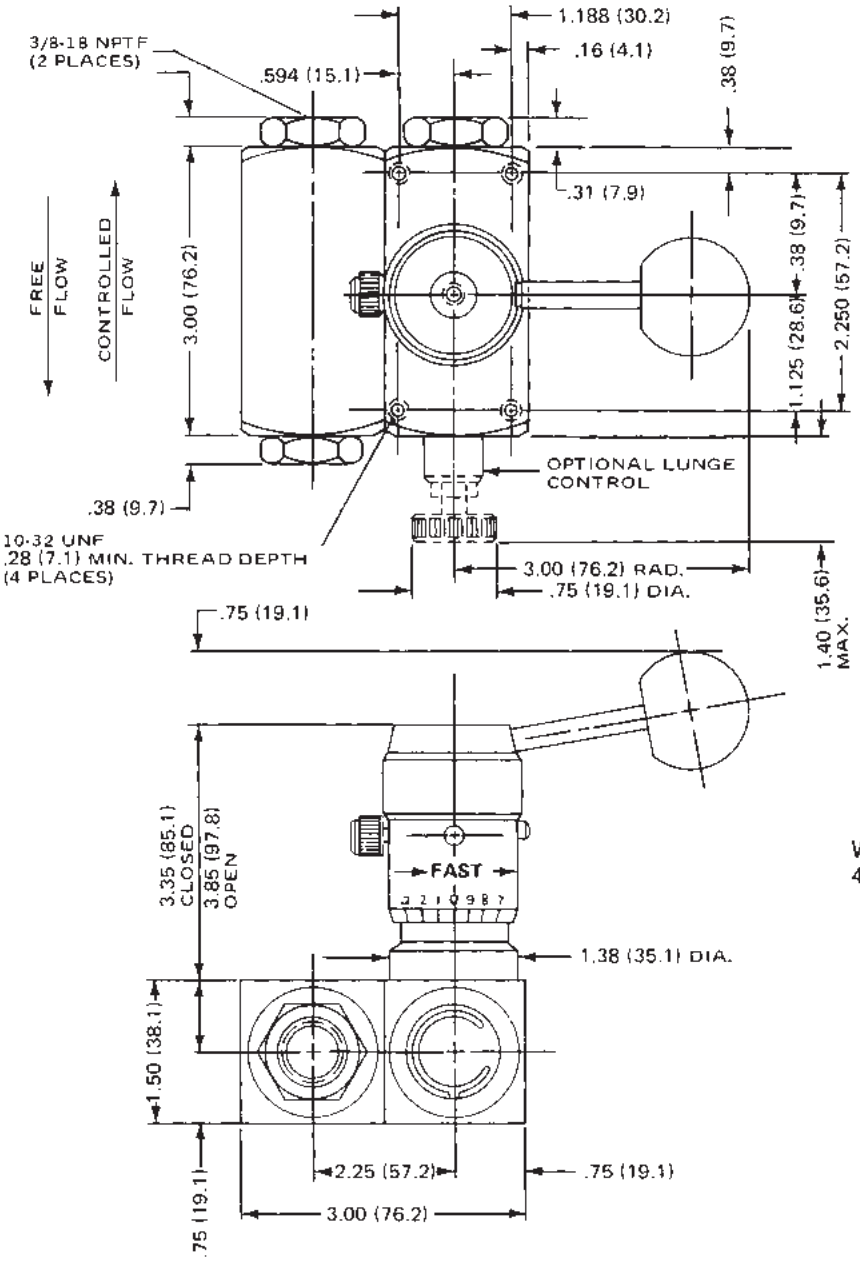

Weight
4.3 Lb. (3 Kg)

3000-D1.p65, dd

Parker Hannifin Corporation
Hydraulic Valve Division
Elyria, Ohio, USA

Millimeter equivalents for inch dimensions are shown in (**)

Model TPCC1200S-28

In-line mounted, pressure compensated, temperature insensitive
Flow Control Valve

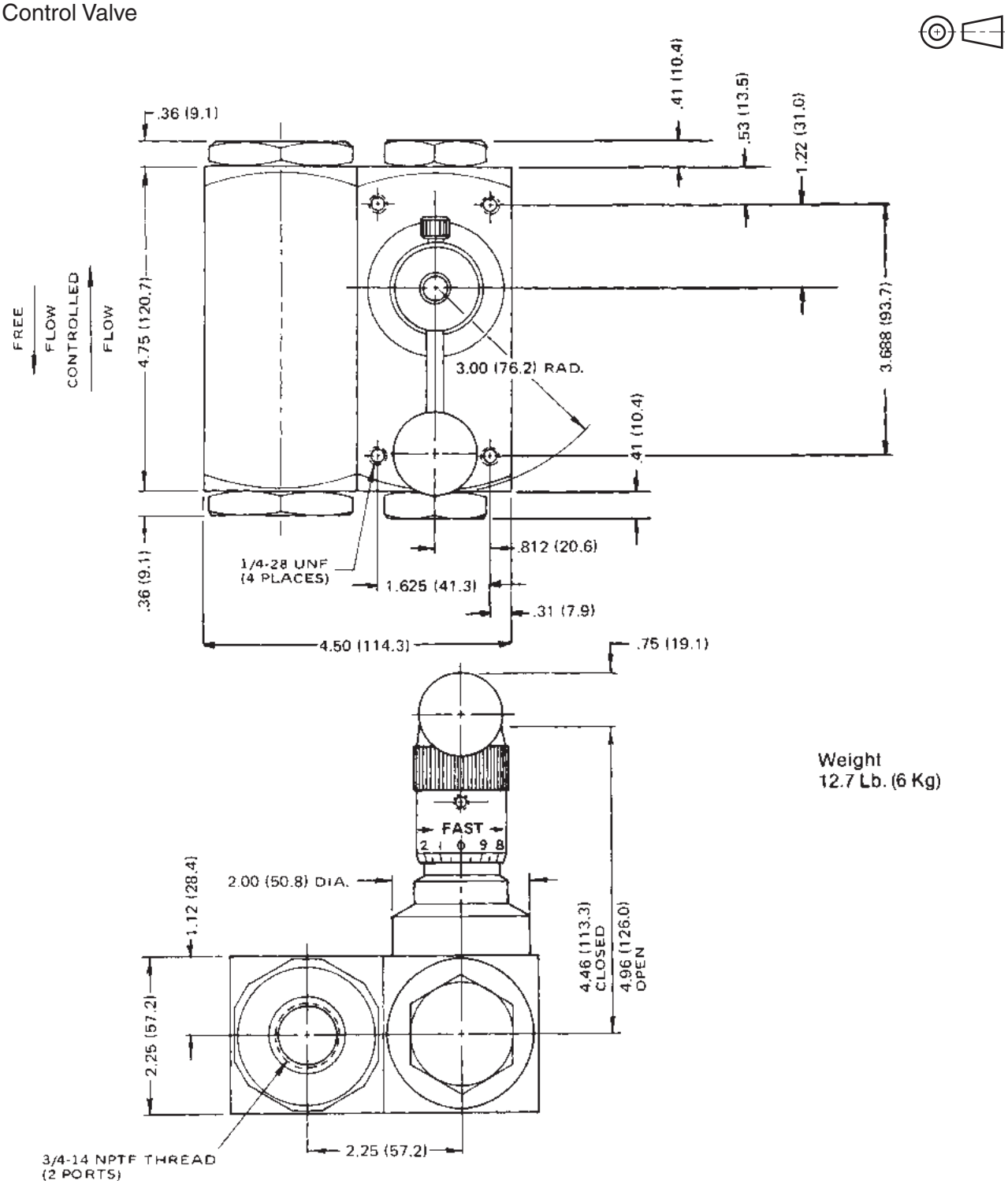

Weight
12.7 Lb. (6 Kg)

3000-D1.p65, dd

Parker Hannifin Corporation
Hydraulic Valve Division
Elyria, Ohio, USA

Millimeter equivalents for inch dimensions are shown in (**)

Subplate

Use bolt kit BK-07 for mounting series TPCS600S valve on this subplate.

Reference Data Only
(Subplates are not available)

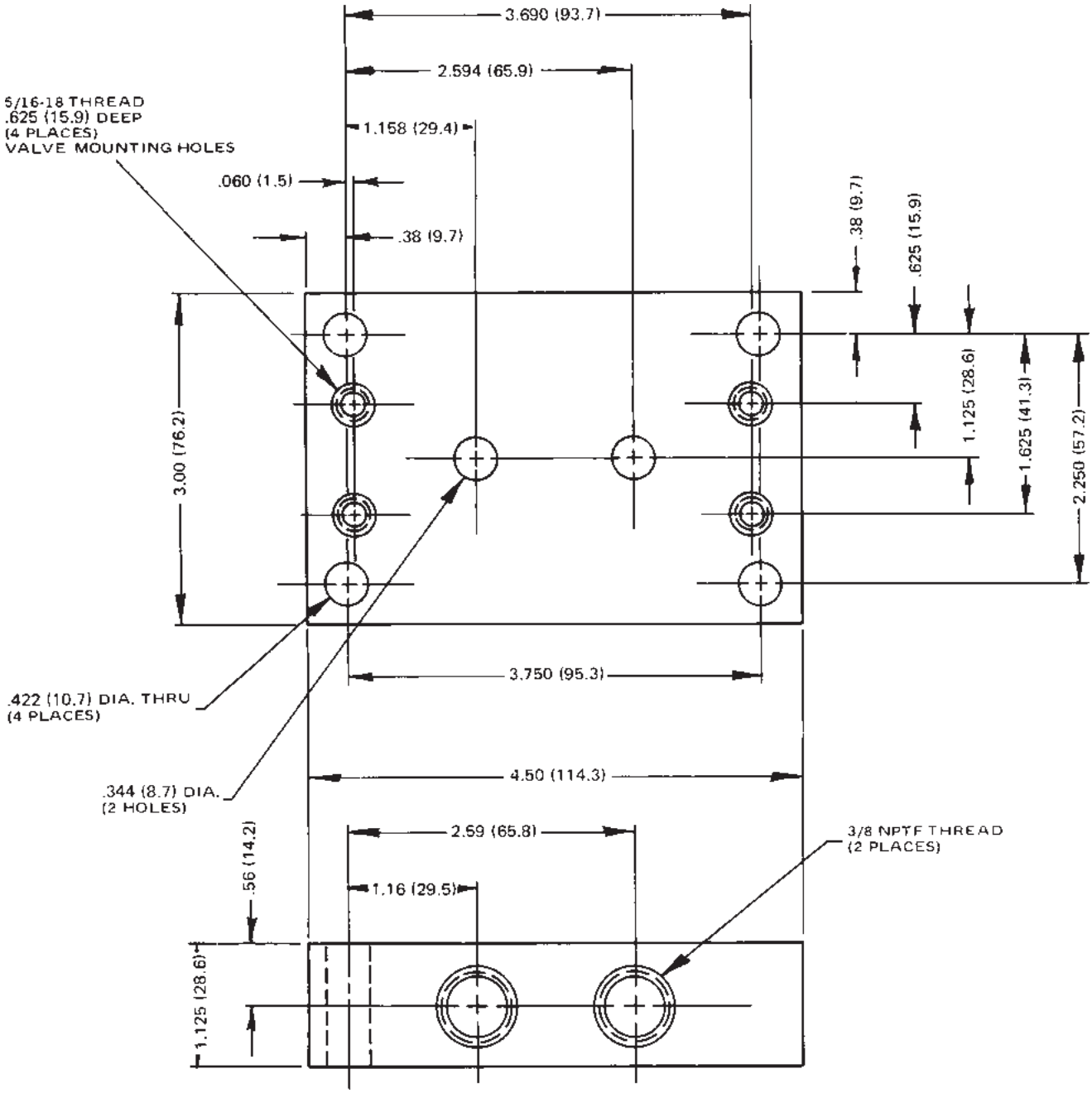

General Description

Series FG3PKC pressure and temperature compensated flow control valves regulate flow and may be used for applications requiring meter-in, meter-out and bleed-off.

Features

- Maintains constant flow with changing inlet and outlet pressures. The minimum pressure differential between inlet and outlet ports must be 100 PSI (7 Bar) to function properly.
- Maintains flow setting within approximately ±5% variation over pressure drop range 100 to 3000 PSI (7 to 205 Bar).
- Has an adjustable flow setting. See needle chart for controlled flow range.
- Trim adjustment option allows valve to be adjusted ±5% when valve is locked in a flow setting.
- Subplate mounted valve is standard with reverse flow check valve. (See Reverse Flow Chart.) Check valve cracking pressure is 5 PSI (0.3 Bar).
- Designed to give a constant flow rate over a wide change of fluid temperature. Refer to needle chart for percentage change in flow.
- Available with optional lunge control for limiting compensator piston travel. This control prepositions the compensator piston to reduce actuator lunge or jump.

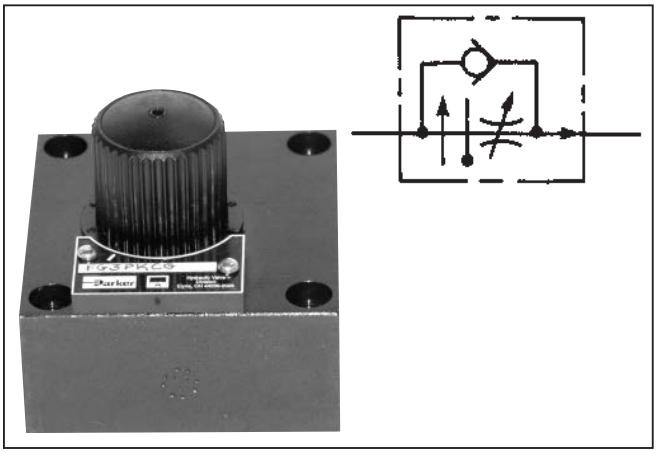

Specifications

Maximum Operating Pressure	207 Bar (3000 PSI)
Pressure Compensation	7 Bar (100 PSI) Minimum
Flow Setting	±5% 7 to 207 Bar (100 to 3000 PSI)

D

Flow Data

Valve Model	(Max.) Controlled Flow	(Max.) Reverse Flow	Pressure Drop △ P @ (Max.) Reverse Flow	Mounting Style	Subplate Port Size	Port Location
FG3PKC	8 GPM (30 L/M)	12GPM (45L/M)	65 PSI (4.4 Bar)	Subplate (NFPA) 2F02	3/8 NPTF	Bottom

Needle Flow Chart FG3PKC

FLOW RANGES			TEMPERATURE COMPENSATION RANGE (For an 80-220 SSU viscosity change)	
Needle	Minimum Flow	Maximum Flow	Flow Range	% Flow Variation
B	5 CIPM (81.96 CC/M)	140 CIPM (.6 GPM)	5-50 CIPM (82-820 CC/M) 51-140 CIPM (836-2295 CC/M)	± 7% ± 5%
D	5 CIPM (81.96 CC/M)	925 CIPM (4 GPM)	.1-1.0 GPM (.4-4 L/M) 1.0-4 GPM (4-16 L/M)	± 5% ± 3%
G	5 CIPM (81.96 CC/M)	1848 CIPM (8 GPM)	.12-1.0 GPM (.5-4 L/M) 2.0-4.0 GPM (8-15 L/M) 4.0-8.0 GPM (15-30 L/M)	± 5% ± 3% ± 3%

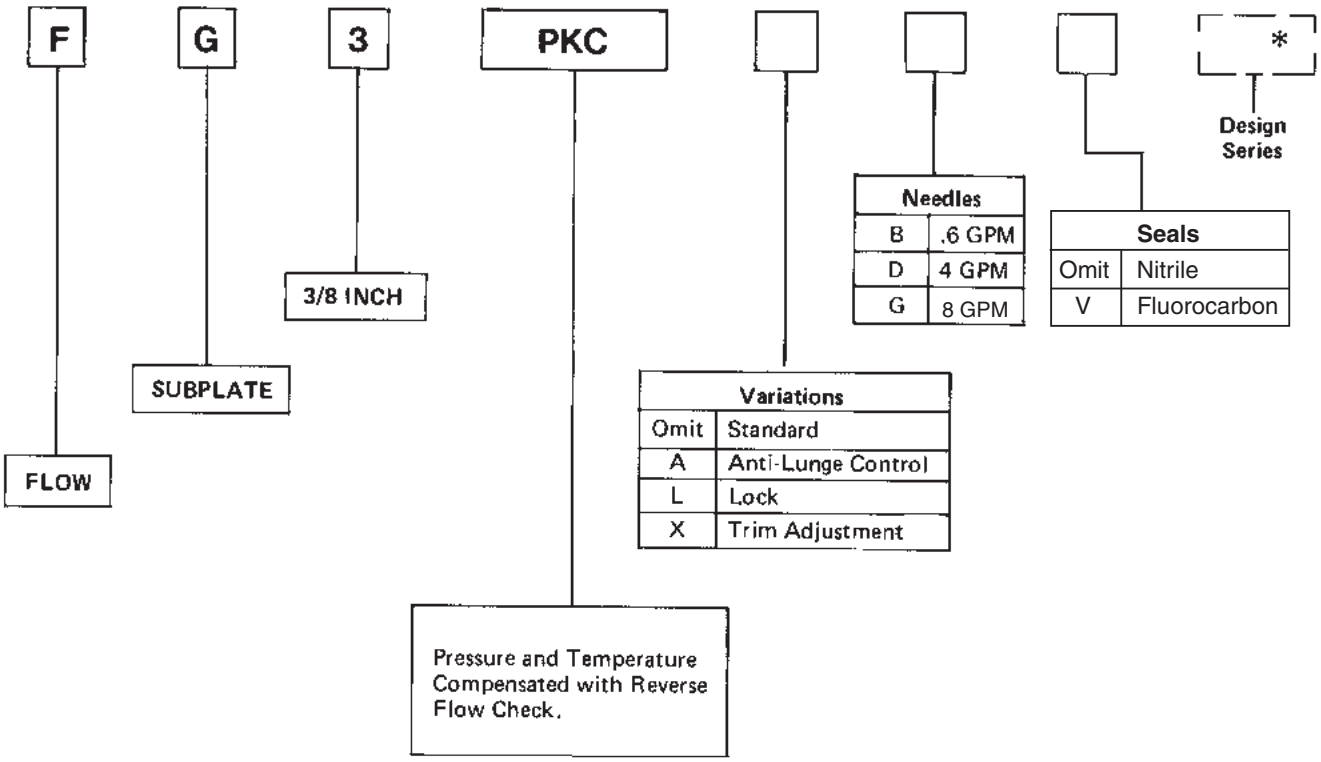

Weight: 4 Kg (8.5 lbs.)

D

SUBPLATE

Valve	Subplate	Ports	Location
FG3PKC	058062-2	3/8" NPTF	Bottom

BOLT KIT

Valve	Bolt Kit	Bolt Specification*	Bolt Torque
FG3PKC	BK 12	5/16-18 x 2"	19 Ft.-Lbs.

*USE SAE GRADE #8 OR BETTER

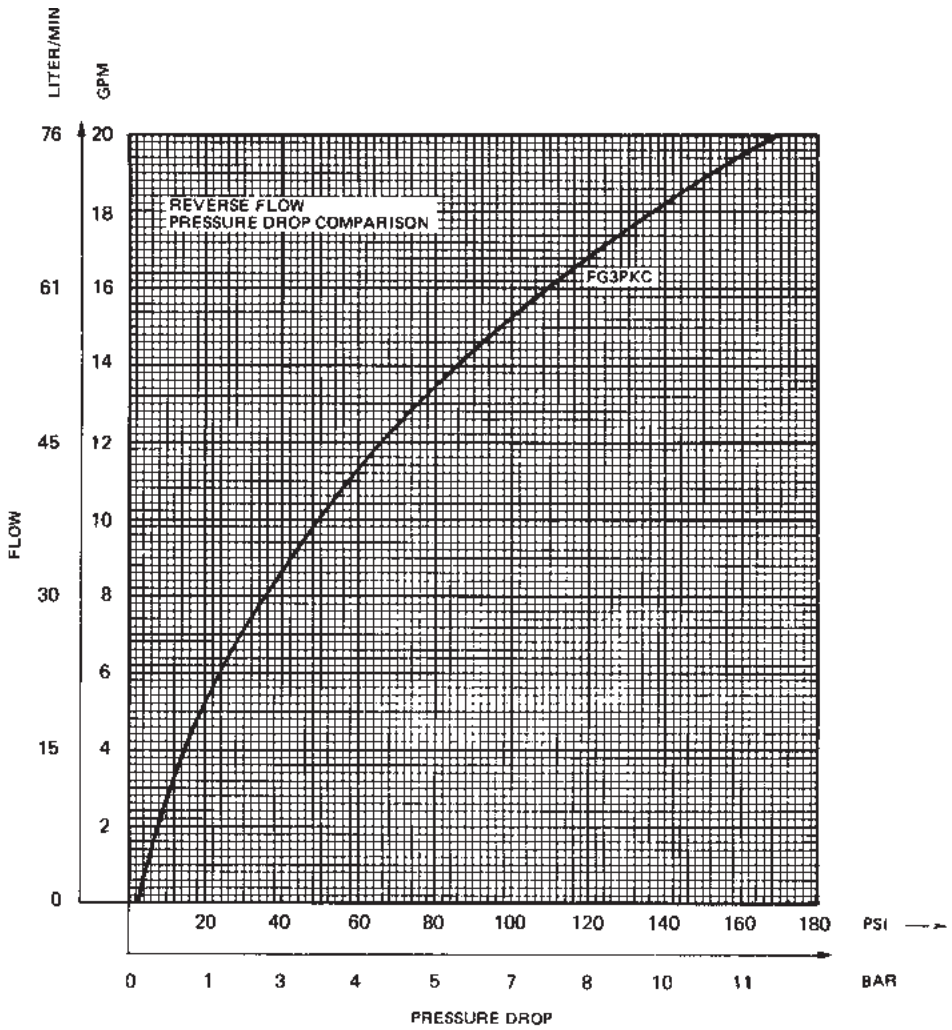

Curves were generated using 100 SSU hydraulic oil. For any other viscosity, pressure drop will change as per chart.	VISCOSITY CORRECTION FACTOR							
	Viscosity (SSU)	75	150	200	250	300	350	400
	Percentage of △ P (Approx.)	93	111	119	126	132	137	141

Millimeter equivalents for inch dimensions are shown in (**)

Model FG3PKC****10

Manifold mounted, temperature insensitive, pressure compensated
Flow Control Valve

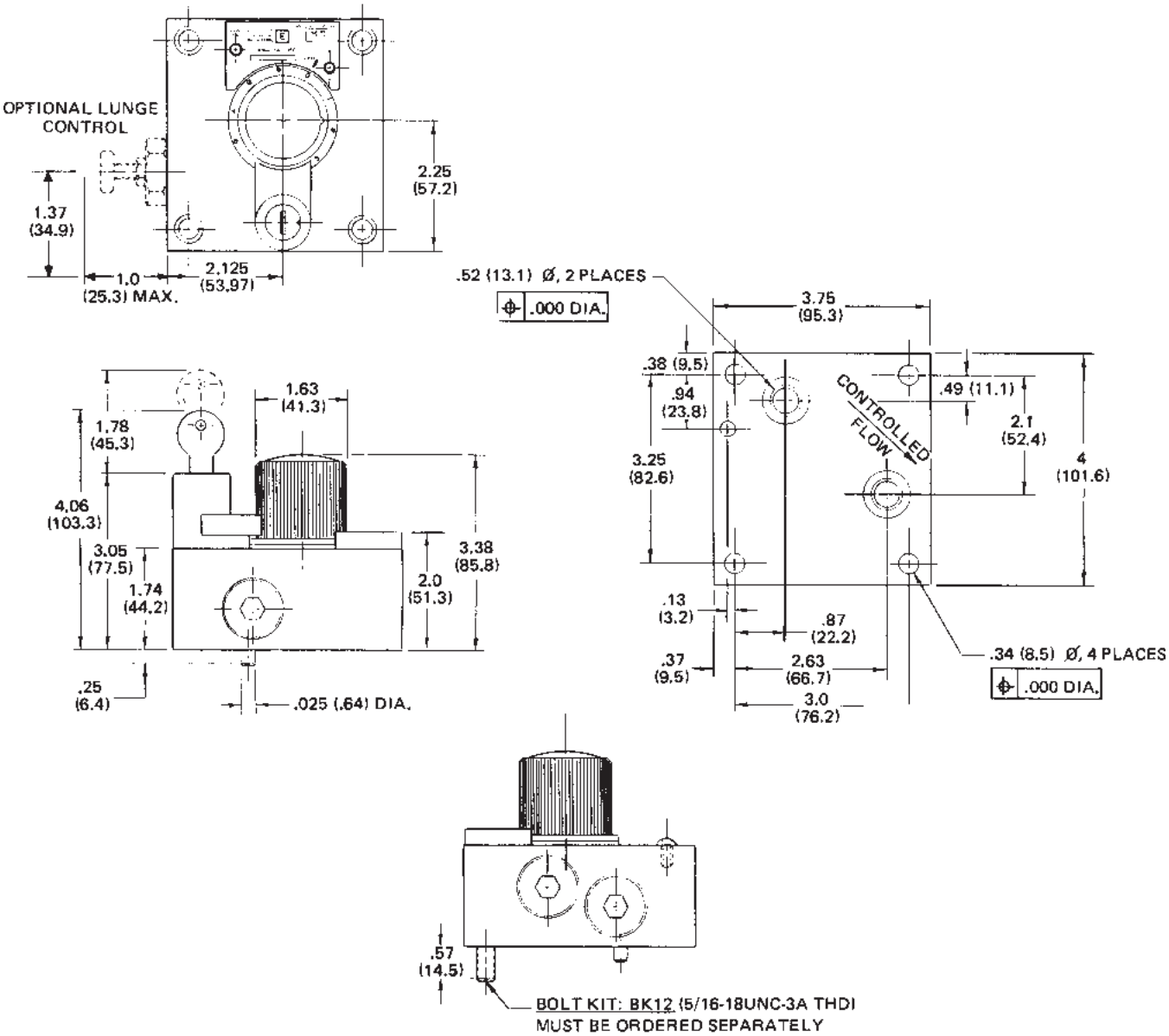

D

3000-D1.p65, dd

Parker Hannifin Corporation
Hydraulic Valve Division
Elyria, Ohio, USA

General Description

Series MVI cartridge-type needle valves are designed for installation in a precision-machined cavity made in the manifold of the machine. Detailed instructions for machining the required cavity for the valve are given on page D30.

Properly installed in precision-machined cavities, these needle valves provide precise metering control and full shutoff of flow. An o-ring and backup ring installed on the cartridge fully isolate the inlet and outlet ports of the machined cavity from each other.

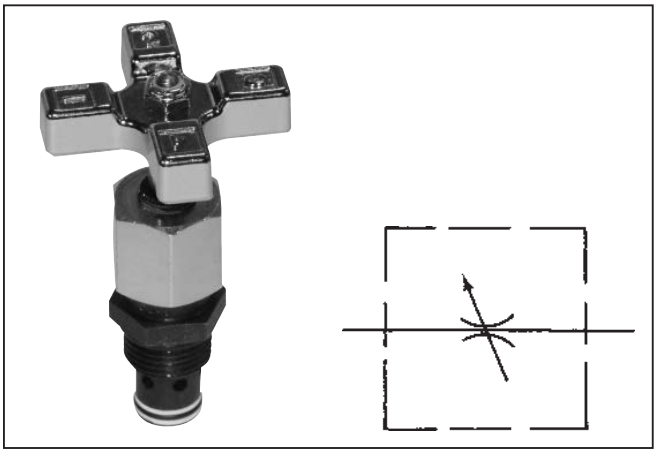

Features

- The exclusive “Colorflow” color-band reference scale on the valve stem is a great convenience and time-saver in setting the valve originally and in returning it to any previous setting.
- Fine and Micro-fine needles available for extremely fine control.
- High efficiency o-ring stem seal that eliminates packing.

Specifications

Maximum Operating Pressure	340 Bar (5000 PSI)
Flow	See table
Needles	Standard 30° taper Optional fine V-notch for Series MVI400 valves only Optional 0.006" slotted for Series MVI400 only
Material	Steel, compatible in steel or aluminum manifold block cavities

Flow Data

Valve Model	Flow (Max.) GPM (L/M)	△P @ Max. Flow	Orifice Area in² Full Open	C_V* Factor	Valve Size
MVI400	5 (19)	100 PSI (7 Bar)	0.0216	0.493	1/4″
MVI400-2	2.8 (11)	200 PSI (14 Bar)	0.0081	0.186	1/4″
MVI400-3	0.5 (2)	200 PSI (14 Bar)	0.0014	0.032	1/4″
MVI600	8 (30)	35 PSI (3 Bar)	0.0567	1.294	3/8″
MVI800	15 (57)	45 PSI (3 Bar)	0.0845	1.930	1/2″
MVI1200	25 (95)	51 PSI (4 Bar)	0.1400	3.205	3/4″

*C_V factor — Flow of water in GPM that valve will pass @ △P of 1 PSI.

D

MVI		S		
Cartridge Needle Valve	Size	Material	Optional Needle	Seals

400	1/4"
600	3/8"
800	1/2"
1200	3/4"

S	Steel

Omit	Standard
2*	Fine
3*	Micro-Fine

*Available on MVI400 only

Omit	Nitrile
V	Fluorocarbon

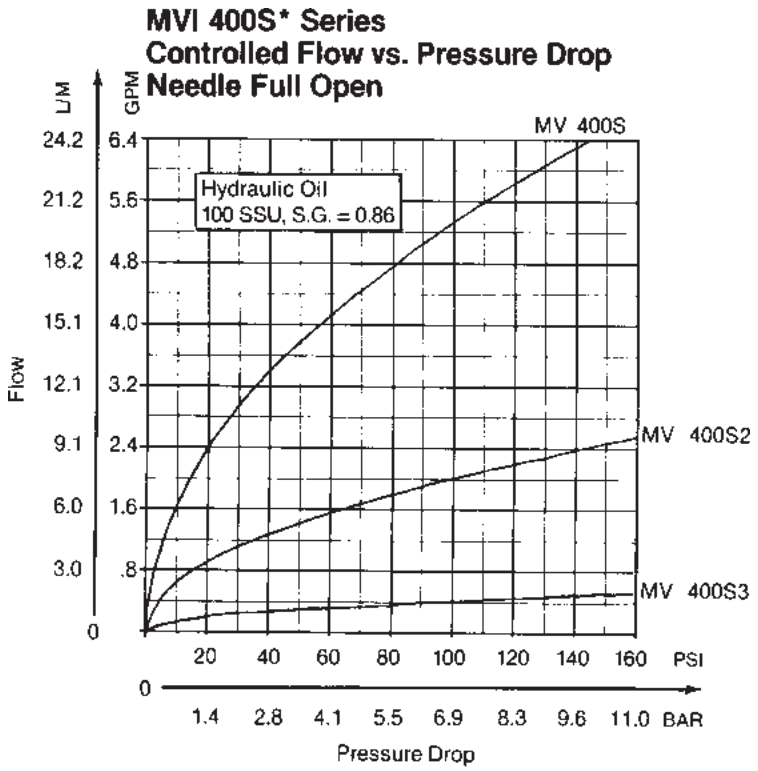

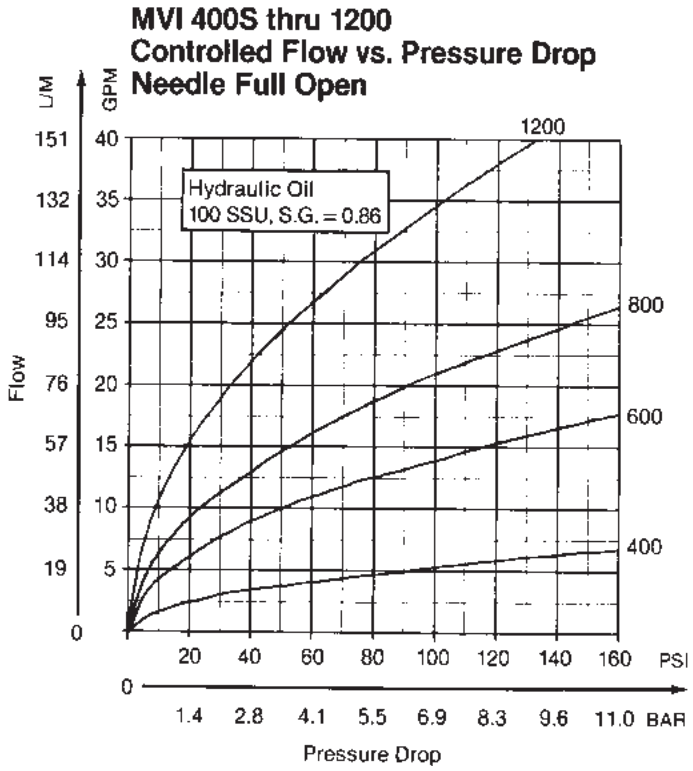

3000-D1.p65, dd

Parker Hannifin Corporation
Hydraulic Valve Division
Elyria, Ohio, USA

Millimeter equivalents for inch dimensions are shown in (**)

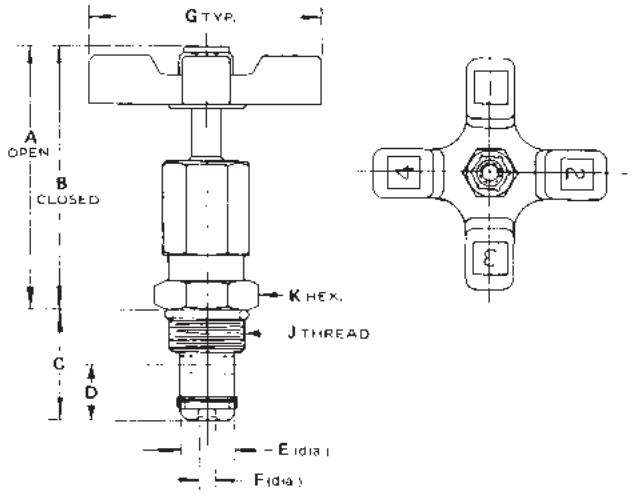

Valve Model	A	B	C	D	E	F	G	J	K	Wt. lb. (kg)
MVI400S*	2.54 (64.5)	2.34 (59.4)	1.00 (25.4)	0.43 (10.9)	.56 (14.2)	.18 (4.6)	2.00 (50.8)	3/4-16UNF-2A	.87 (22.1)	0.4 (0.2)
MVI600S	3.16 (80.3)	2.86 (72.6)	1.18 (30.0)	0.53 (13.5)	.62 (15.7)	.31 (7.9)	2.50 (63.5)	7/8-14UNF-2A	1.00 (25.4)	0.6 (0.3)
MVI800S	3.59 (91.2)	3.09 (78.5)	1.56 (39.6)	0.60 (15.2)	.80 (20.3)	.37 (9.4)	3.25 (82.6)	1-1/16-12UN-2A	1.25 (31.8)	1.2 (0.5)
MVI1200S	4.00 (101.6)	3.45 (87.6)	1.71 (43.4)	0.75 (19.1)	1.06 (26.9)	.46 (11.7)	3.87 (98.3)	1-5/16-12UN-2A	1.50 (38.1)	2.0 (0.9)

Machining the Cavity

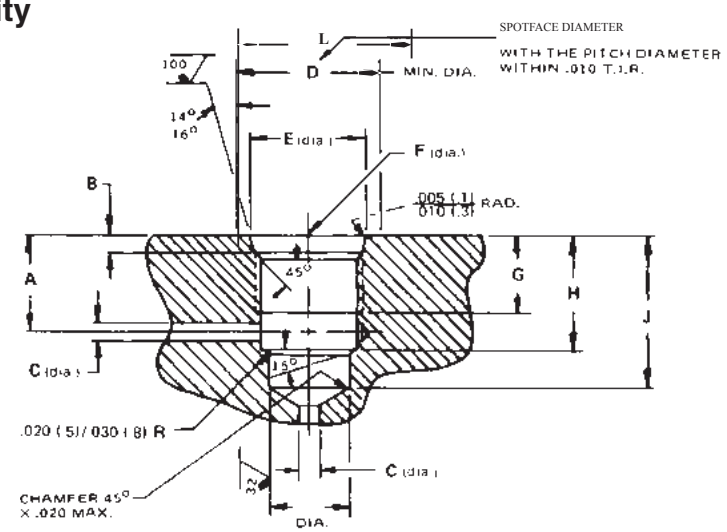

Valve Model	A	B	C	D	E	F	G	H	J	K	L
MVI400S	.56 (14.2)	.100/.115 (2.5/2.9)	.21 (5.3)	.87 (22.1)	.811/.816 (20.6/20.7)	3/4-16 UNF-2B	.56 (14.2)	.70 (17.8)	1.06 (26.9)	.562/.564 (14.3/14.3)	1.188 (30.2)
MVI600S	.65 (16.5)	.100/.115 (2.5/2.9)	.32 (8.1)	1.00 (25.4)	.942/.947 (23.9/24.1)	7/8-14 UNF-2B	.65 (16.5)	.85 (21.6)	1.25 (31.8)	.624/.626 (15.8/15.9)	1.344 (34.1)
MVI800S	.95 (24.1)	.130/.145 (3.3/3.7)	.40 (10.2)	1.25 (31.8)	1.148/1.153 (29.2/29.3)	1-1/16-12 UN-2B	.75 (19.1)	1.18 (30.0)	1.62 (41.1)	.811/.813 (20.6/20.7)	1.625 (41.3)
MVI1200S	.97 (24.6)	.130/.145 (3.3/3.7)	.50 (12.7)	1.50 (38.1)	1.398/1.403 (35.3/35.6)	1-5/16-12 UN-2B	.75 (19.1)	1.25 (31.8)	1.78 (45.2)	1.062/1.064 (26.9/26.9)	1.910 (48.5)

3000-D1.p65, dd

Parker Hannifin Corporation
Hydraulic Valve Division
Elyria, Ohio, USA

General Description

Series D deceleration valve is a cam operated 2-way valve with tapered spool. As the cam depresses the plunger, flow thorugh the valve is gradually decreased to the cut-off point.

This valve is also available as a normally closed, cam operated 2-way valve.

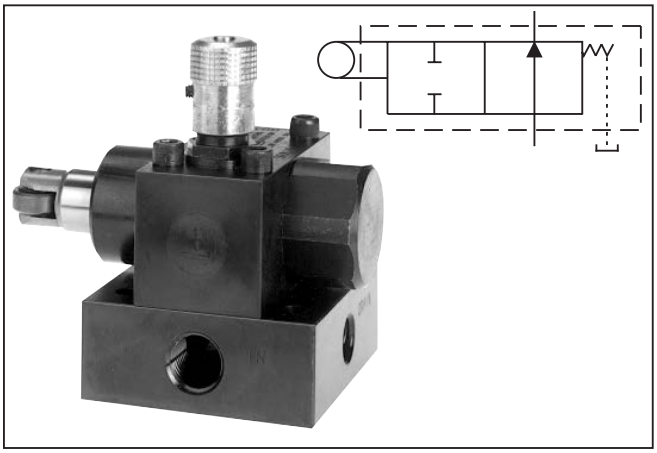

Specfications

Maximum Operating Pressure	210 Bar (3000 PSI)
Maximum Flow	See flow vs. pressure drop curves, reverse flow vs. pressure drop, flow vs. plunger travel curves
Nominal Flow	D600 37.9 LPM (10 GPM) D1200 132.5 LPM (35 GPM)
Port Configurations	See dimensional drawings and/or ordering information for configuration availability

Features

- The exclusive "Colorflow" color-band reference scale on the valve stem is a great convenience and time-saver in setting the valve originally and in returning it to any previous setting.
- A simple set screw locks the valve on any desired setting.

D

Flow Data

Valve Model	Flow, max., GPM (L/M)	Pressure Drop △P @ (Max.) PSI (Bar) (Plunger Full Open)	Mounting	Port Size	Subplate Port Location
D600	19 (72)	200 (14)	Inline	3/8 NPTF	—
DC600	19 (72)	200 (14)	Inline	3/8 NPTF	—
DF600	19 (72)	200 (14)	Inline	3/8 NPTF	—
DN600	19 (72)	200 (14)	Inline	3/8 NPTF	—
DNS600	19 (72)	200 (14)	Subplate	3/8 NPTF	Side
DS600	19 (72)	200 (14)	Subplate	3/8 NPTF	Side
D1200	60 (227)	120 (8)	Inline	3/4 NPTF	—
DC1200	60 (227)	120 (8)	Inline	3/4 NPTF	—
DF1200	60 (227)	120 (8)	Inline	3/4 NPTF	—
DFS1200	60 (227)	120 (8)	Subplate	3/4 NPTF	Bottom
DN1200	60 (227)	120 (8)	Inline	3/4 NPTF	—
DNS1200	60 (227)	120 (8)	Subplate	3/4 NPTF	Bottom
DS1200	60 (227)	120 (8)	Subplate	3/4 NPTF	Bottom
DCS1200	60 (227)	120 (8)	Subplate	3/4 NPTF	Bottom

Reverse Flow

Valve Model	With Check GPM (L/M)	With Needle	With Check & Needle GPM (L/M)	Flow Path
D**600S**	19 (72)	N.O. or N.C. valve reverse flow is proportional to needle setting	19 (72)	Normally Open or Closed
D**1200S**	60 (227)		60 (227)	Normally Open or Closed

3000-D1.p65, dd

Parker Hannifin Corporation
Hydraulic Valve Division
Elyria, Ohio, USA

D

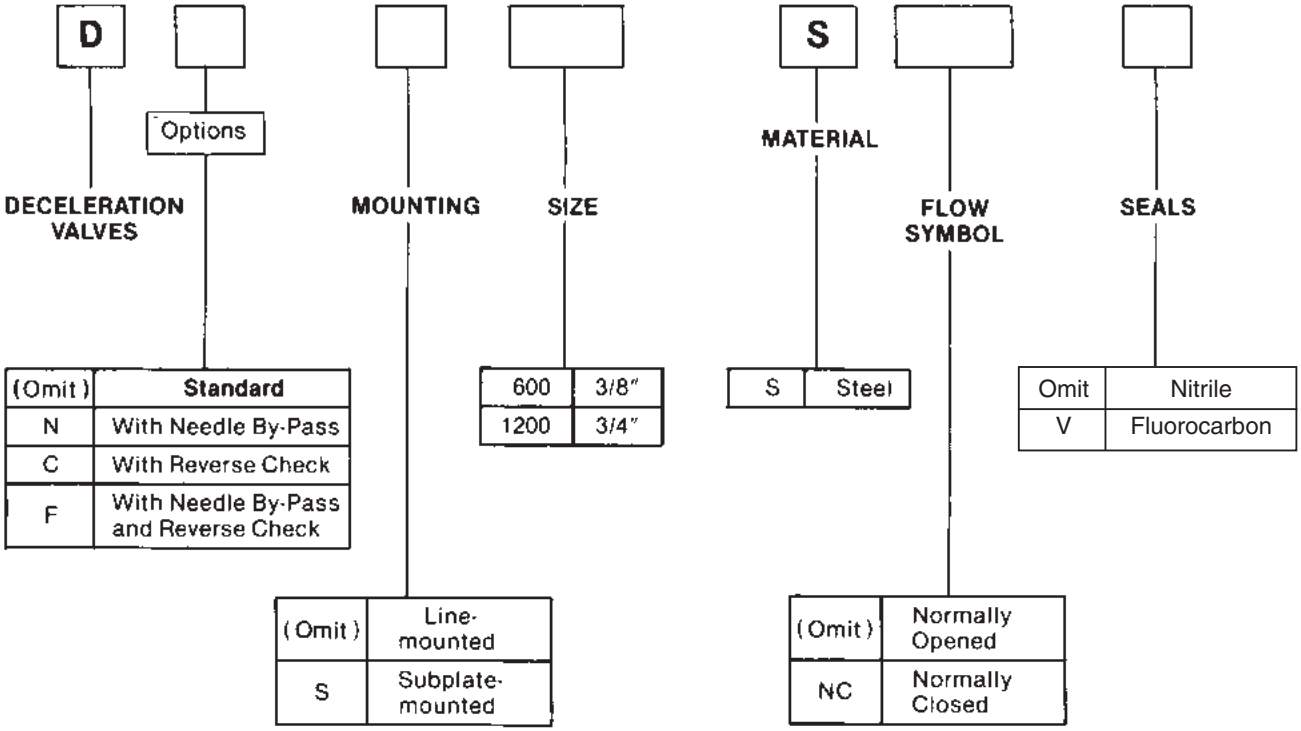

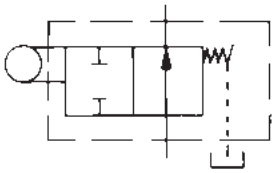

STANDARD DECELERATION VALVE

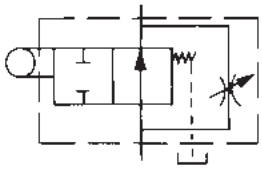

DECELERATION VALVE WITH NEEDLE BY-PASS

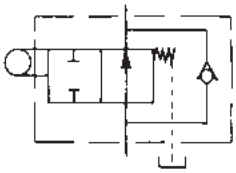

DECELERATION VALVE WITH REVERSE CHECK

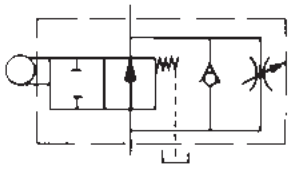

DECELERATION VALVE WITH NEEDLE BY-PASS AND REVERSE CHECK.

Bolt Kits

Valve	Bolt Kit	Bolts SAE Grade 8 or Better	Bolt Torque
DNS600S DS600S	BK06	1/4-20 x 2"	19 FT.-LBS.
DCS1200S DFS1200S	BK38	3/8-16 x 1-3/4"	34 FT.-LBS.
DNS1200S DS1200S	BK11	3/8-16 x 2-3/4"	34 FT.-LBS.

3000-D1.p65, dd

Parker Hannifin Corporation
Hydraulic Valve Division
Elyria, Ohio, USA

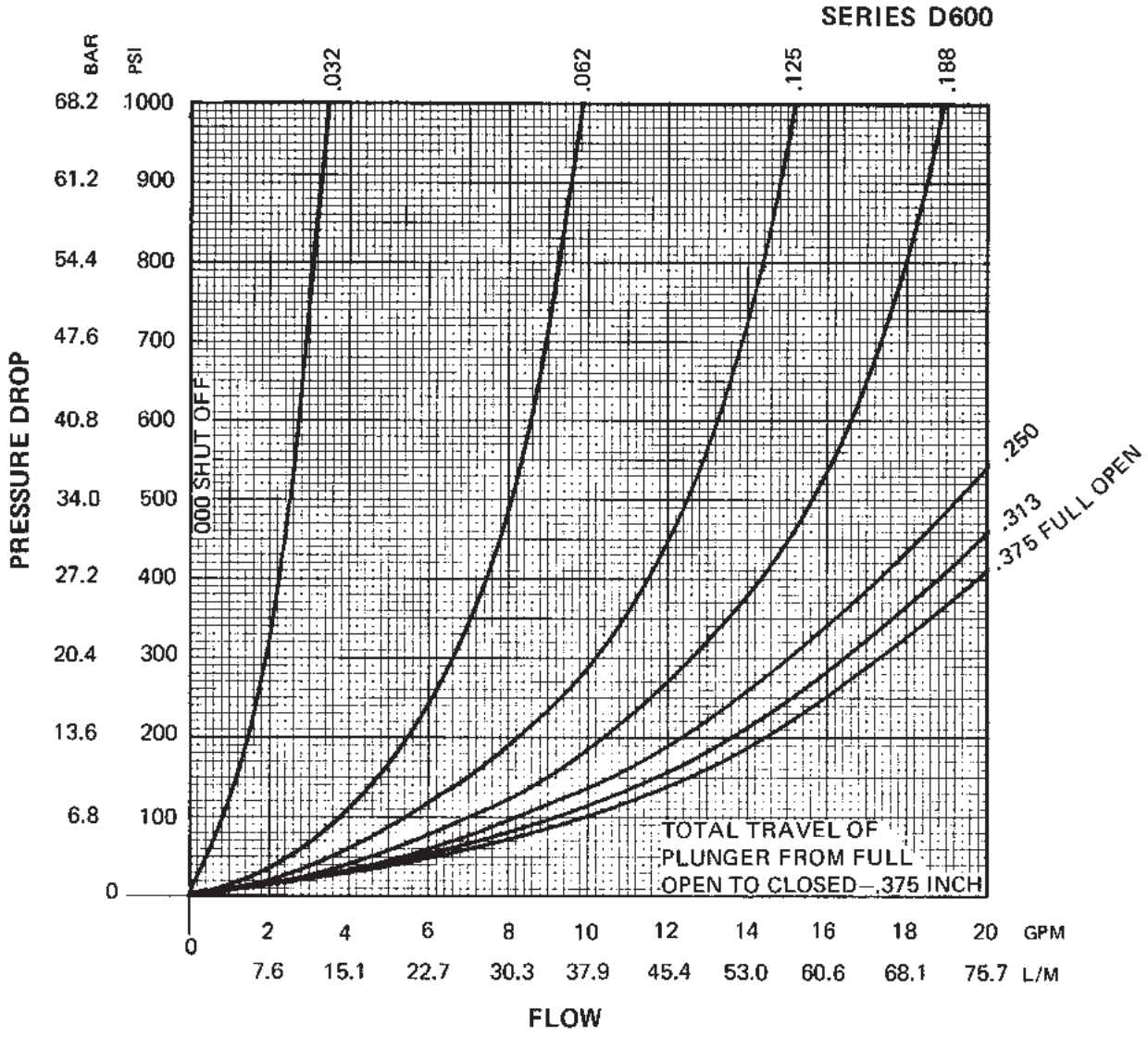

FLOW vs. PRESSURE DROP FOR VARIOUS PLUNGER POSITIONS

D

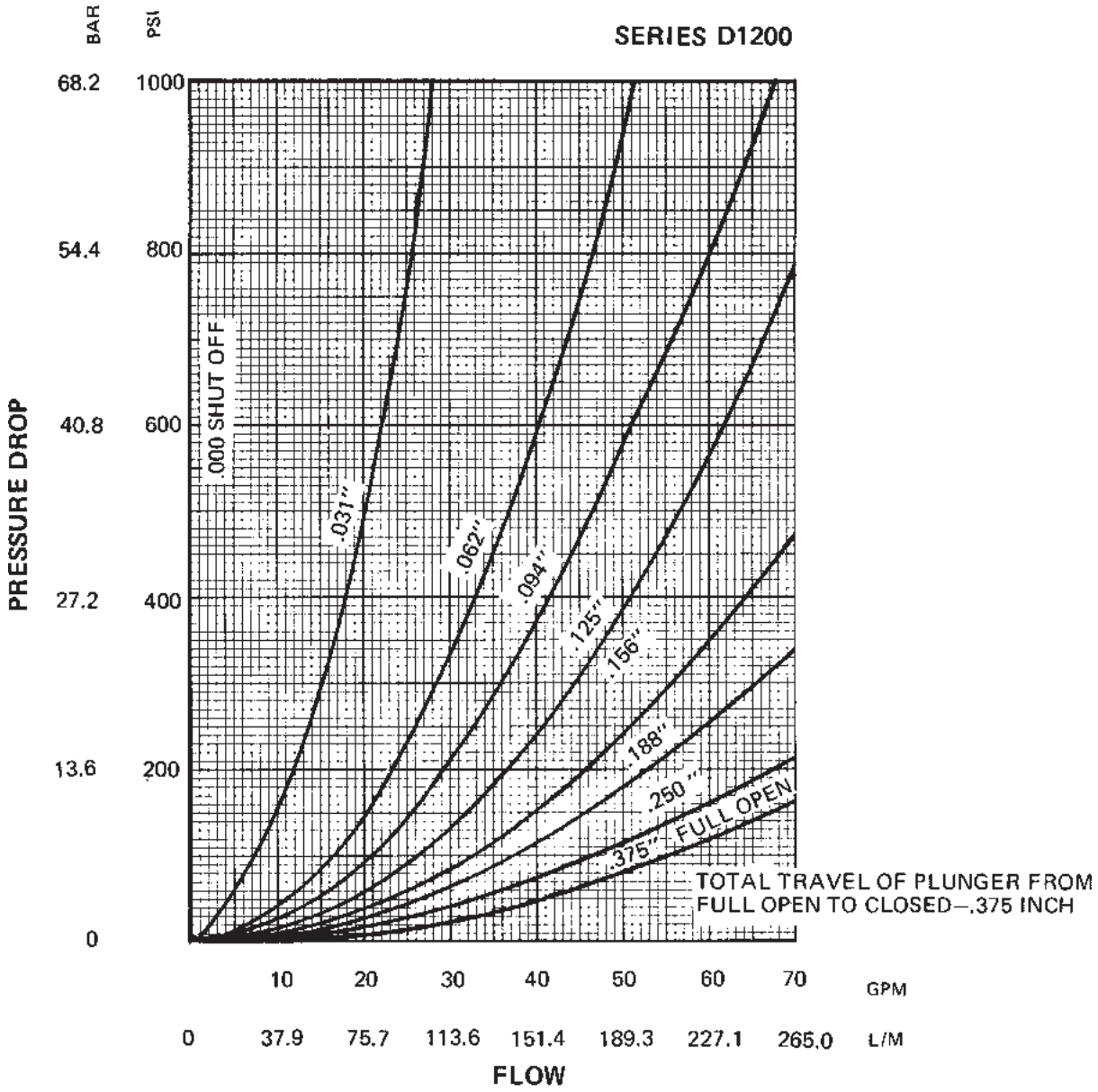

FLOW vs. PRESSURE DROP
FOR VARIOUS PLUNGER POSITIONS

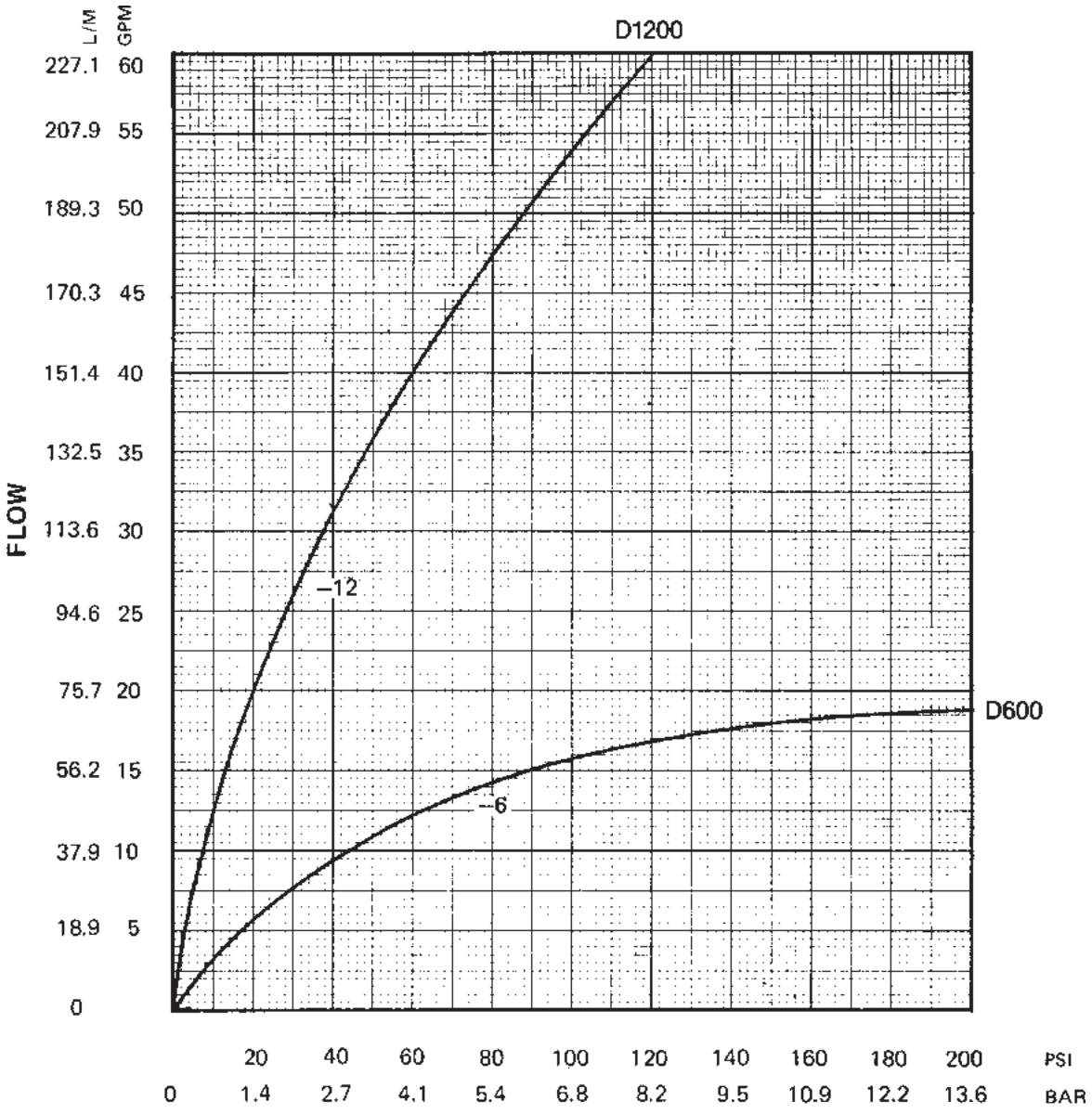

PRESSURE DROP
REVERSE FLOW vs. PRESSURE DROP
(PLUNGER OPEN)

Dimensions are shown in inches

Models D600S and DN600S

In-line mounted Deceleration Valves

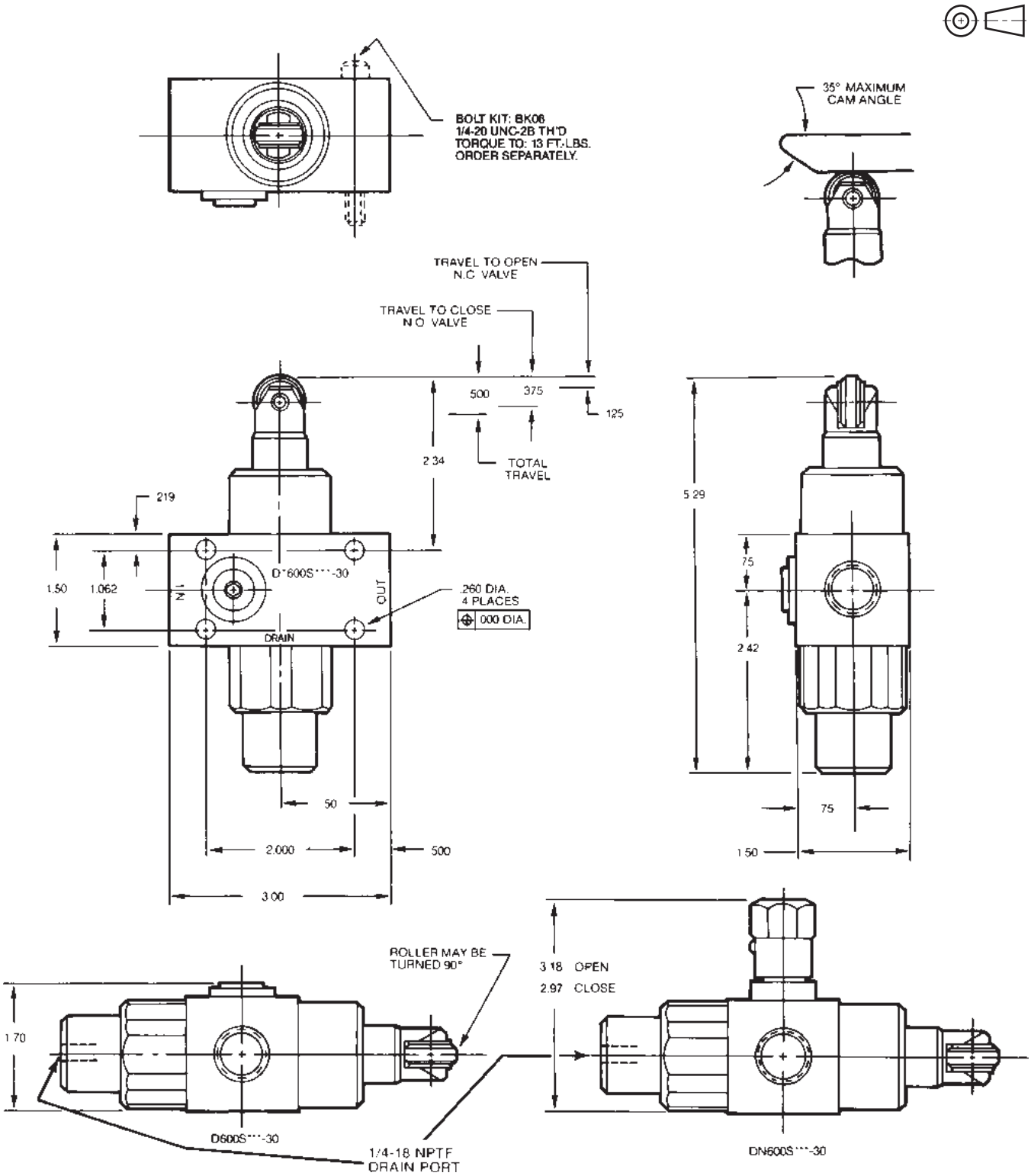

3000-D1.p65, dd

Parker Hannifin Corporation
Hydraulic Valve Division
Elyria, Ohio, USA

Millimeter equivalents for inch dimensions are shown in (**)

Model D1200S

In-line mounted, normally-open/normally-closed
Deceleration Valves

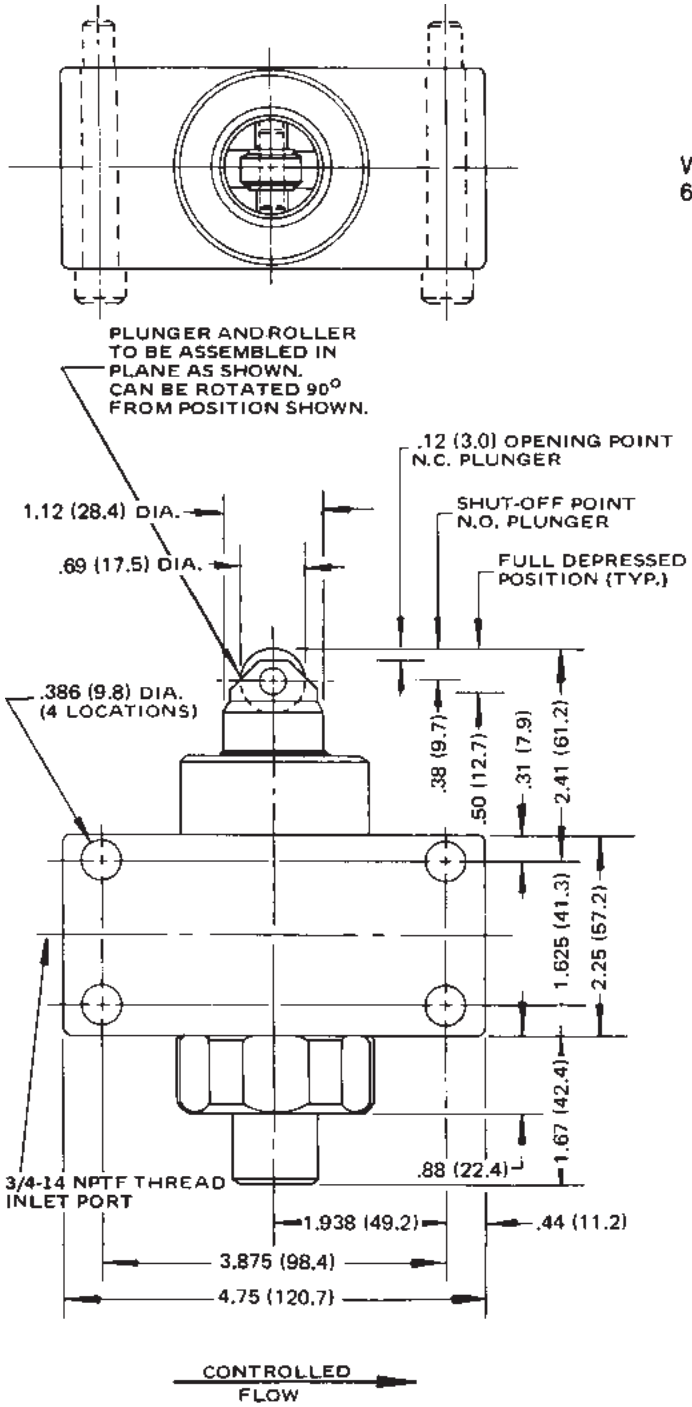

Weight
6.5 Lb. (3.0 Kg.)

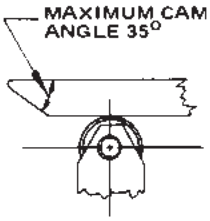

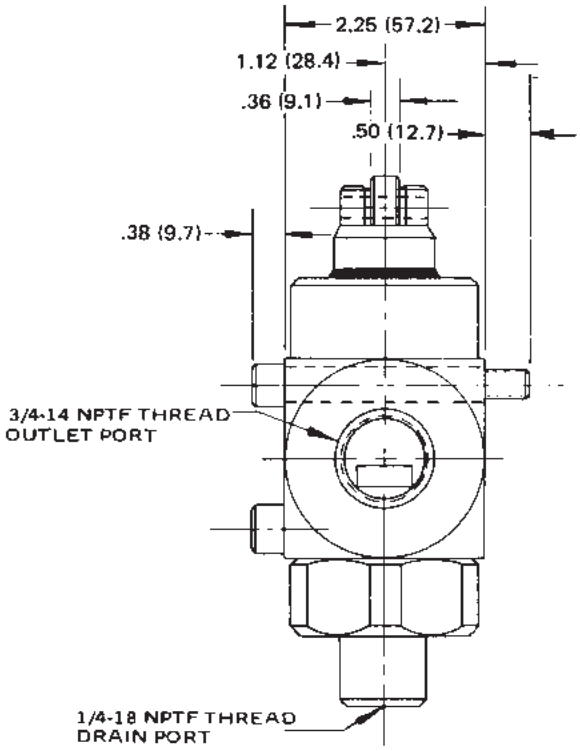

1. WORKING PRESSURE, MAX.: 3000 PSI (210 Bar)
2. DRAIN: MAX. ALLOWABLE BACK PRESSURE: 30 PSI (2 Bar)
3. FORCE TO DEPRESS PLUNGER: 50 Lbs. (22.8 Kg.) (DRAIN PRESSURE INCREASES FORCE REQ'D. TO DEPRESS PLUNGER.)

Millimeter equivalents for inch dimensions are shown in (**)

Model DN1200S

In-line mounted Deceleration Valve
with bypass needle

Weight
7.5 Lb. (3.4 Kg.)

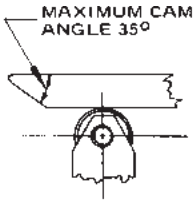

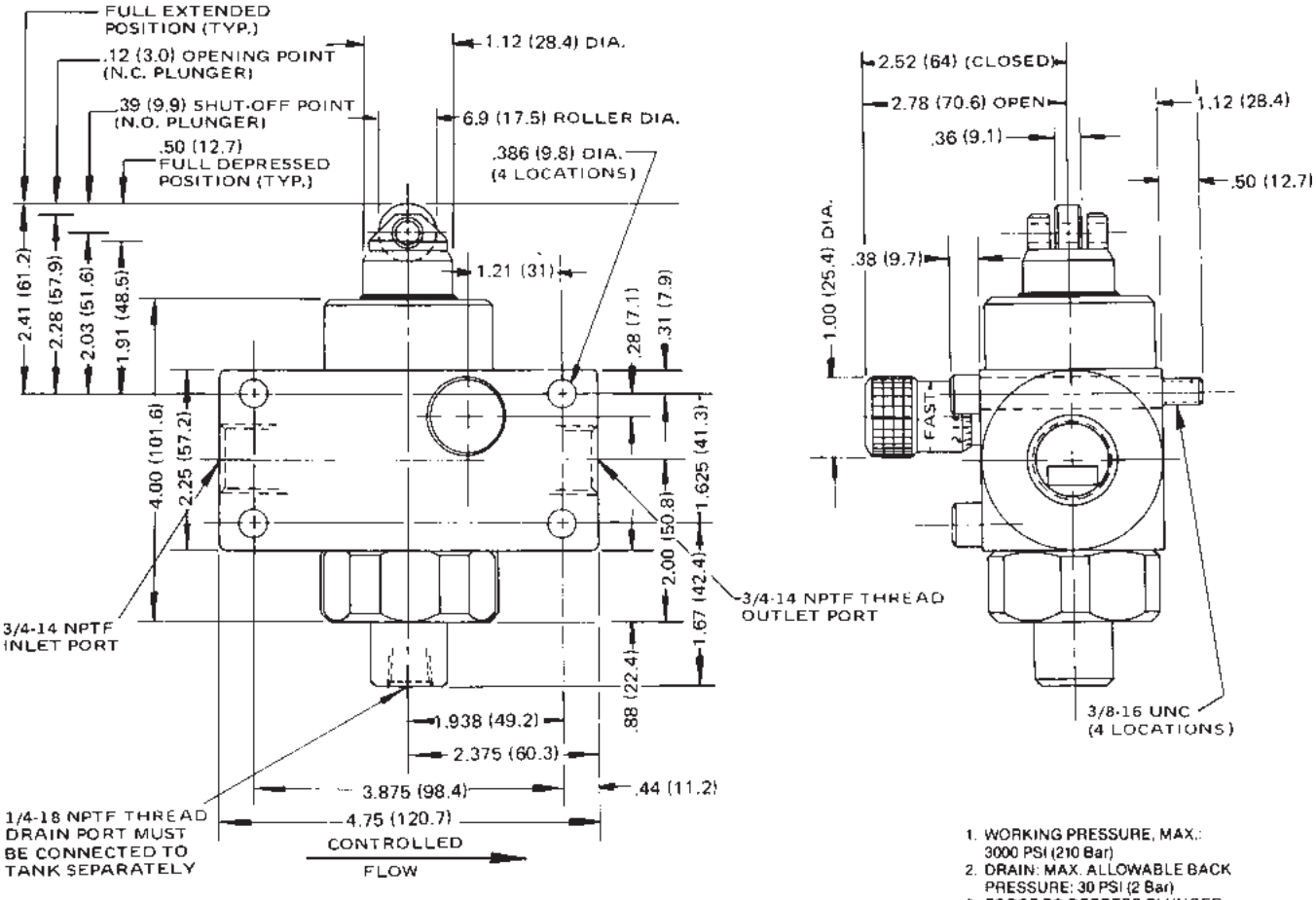

1. WORKING PRESSURE, MAX.: 3000 PSI (210 Bar)
2. DRAIN: MAX. ALLOWABLE BACK PRESSURE: 30 PSI (2 Bar)
3. FORCE TO DEPRESS PLUNGER 50 Lbs. (22.8 Kg.) (DRAIN PRESSURE INCREASES FORCE REQ'D. TO DEPRESS PLUNGER.)

Dimensions are shown in inches

Models DNS600S – DS600S

Manifold mounted Deceleration Valves

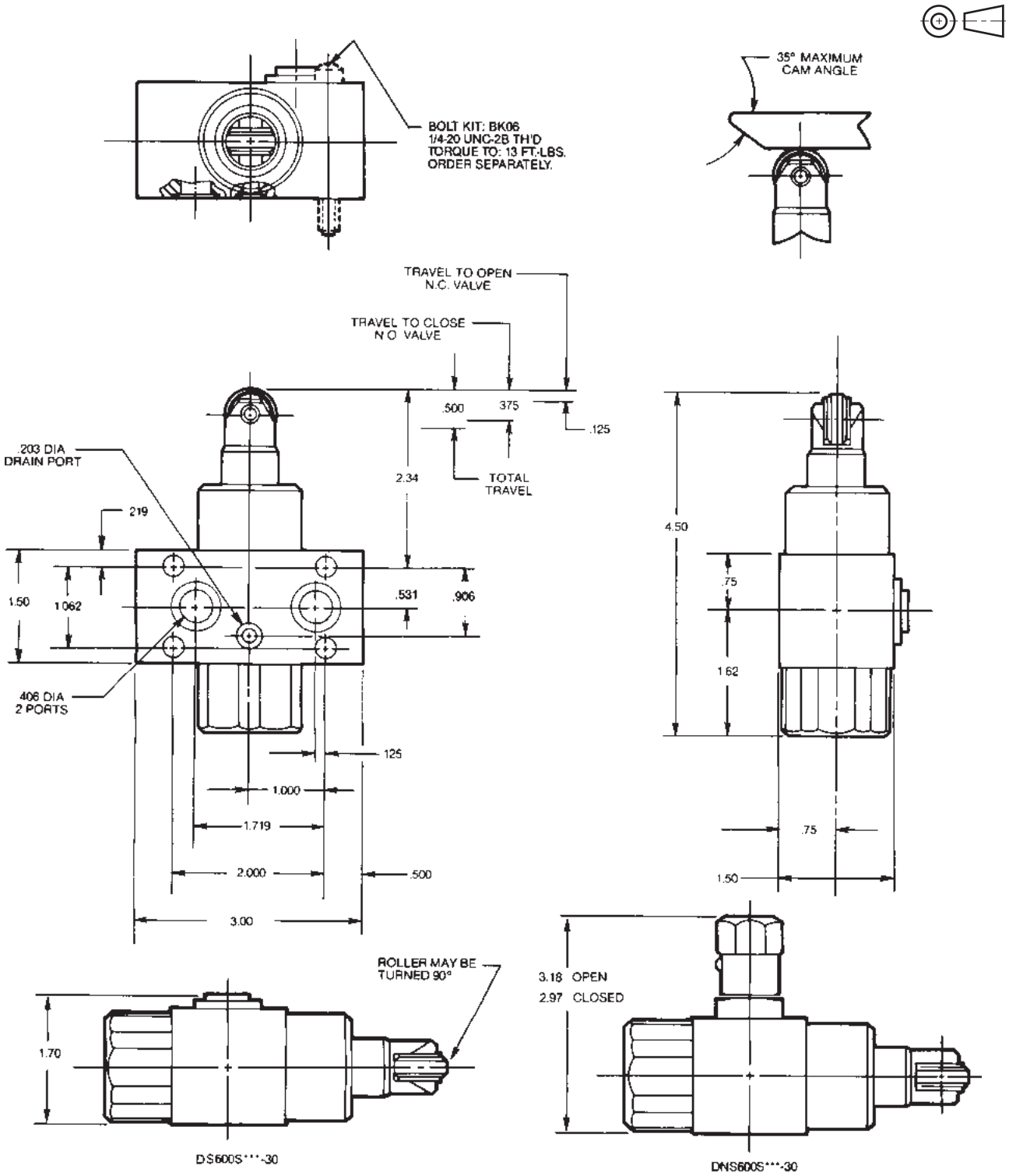

Millimeter equivalents for inch dimensions are shown in (**)

Model DNS1200S

Manifold mounted Deceleration Valve
with bypass needle

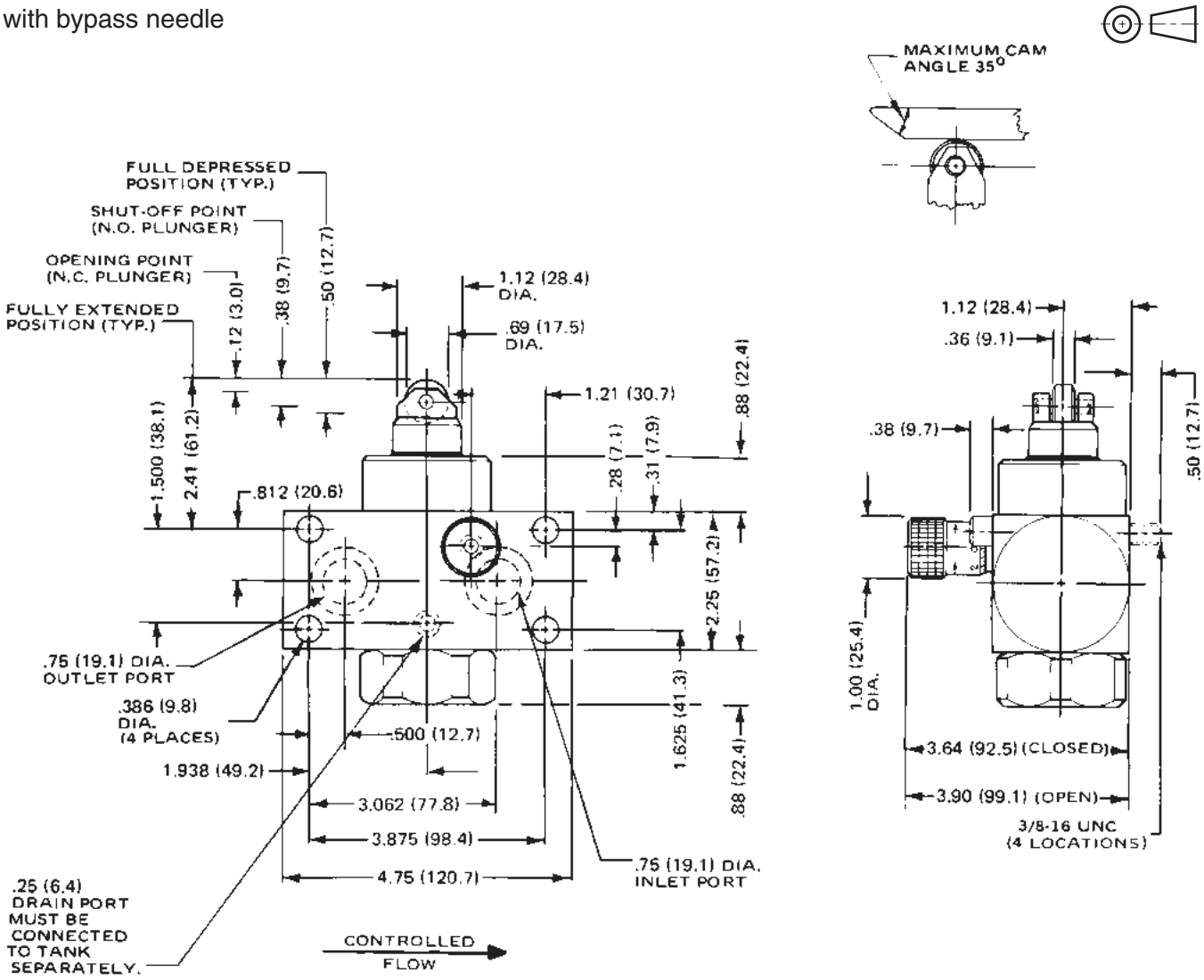

1. WORKING PRESSURE, MAX.: 3000 PSI (210 Bar)
2. DRAIN: MAX. ALLOWABLE BACK PRESSURE: 30 PSI (2 Bar)
3. FORCE TO DEPRESS PLUNGER: 50 Lbs. (22.8 Kg.) (DRAIN PRESSURE INCREASES FORCE REQ'D. TO DEPRESS PLUNGER.)

Weight
7.5 Lb. (3.4 Kg.)

3000-D1.p65, dd

Parker Hannifin Corporation
Hydraulic Valve Division
Elyria, Ohio, USA

Millimeter equivalents for inch dimensions are shown in (**)

Model DS1200S

Manifold mounted, normally open/normally closed
Deceleration Valve

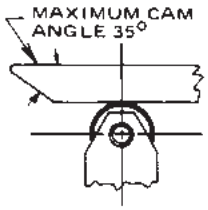

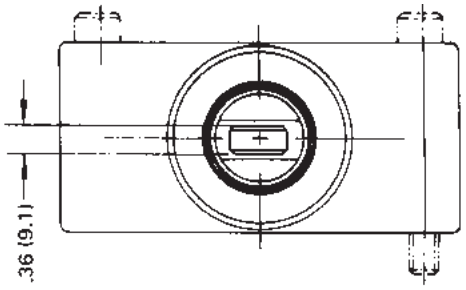

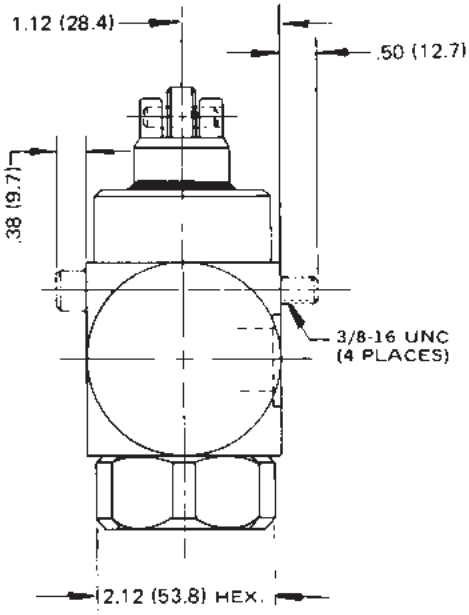

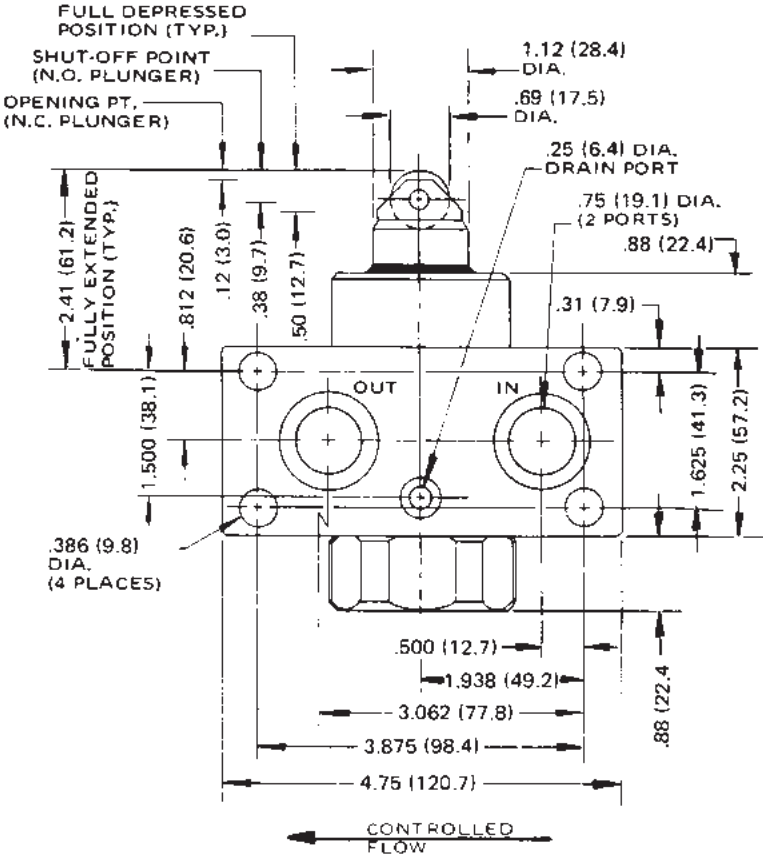

NOTES:
1. MAX. WORKING PRESSURE 3000 PSI.
2. DRAIN-MAX. ALLOWABLE BACK PRESSURE 30 PSI.
3. FORCE-REQ'D. TO DEPRESS PLUNGER 50 LBS.

"DRAIN PRESSURE INCREASES FORCE REQ'D. TO DEPRESS PLUNGER."

D

3000-D1.p65, dd

Parker Hannifin Corporation
Hydraulic Valve Division
Elyria, Ohio, USA

Dimensions are shown in inches

Model DC600S

In-line mounted Deceleration Valve
with reverse check

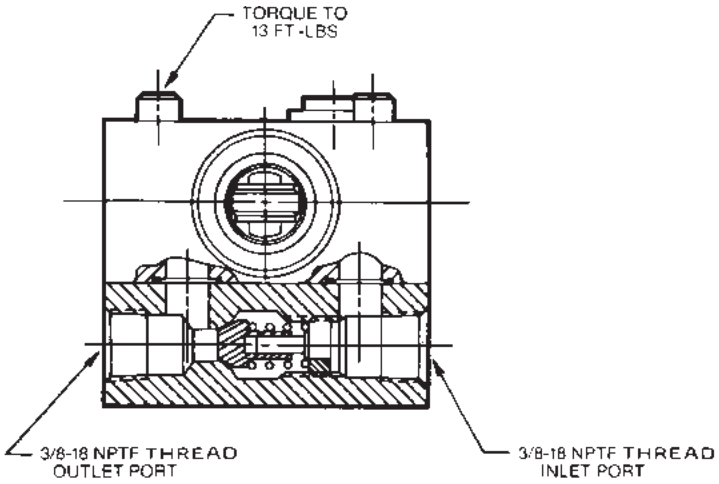

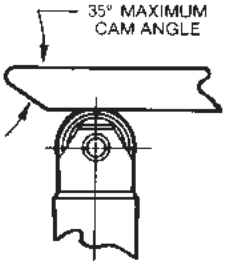

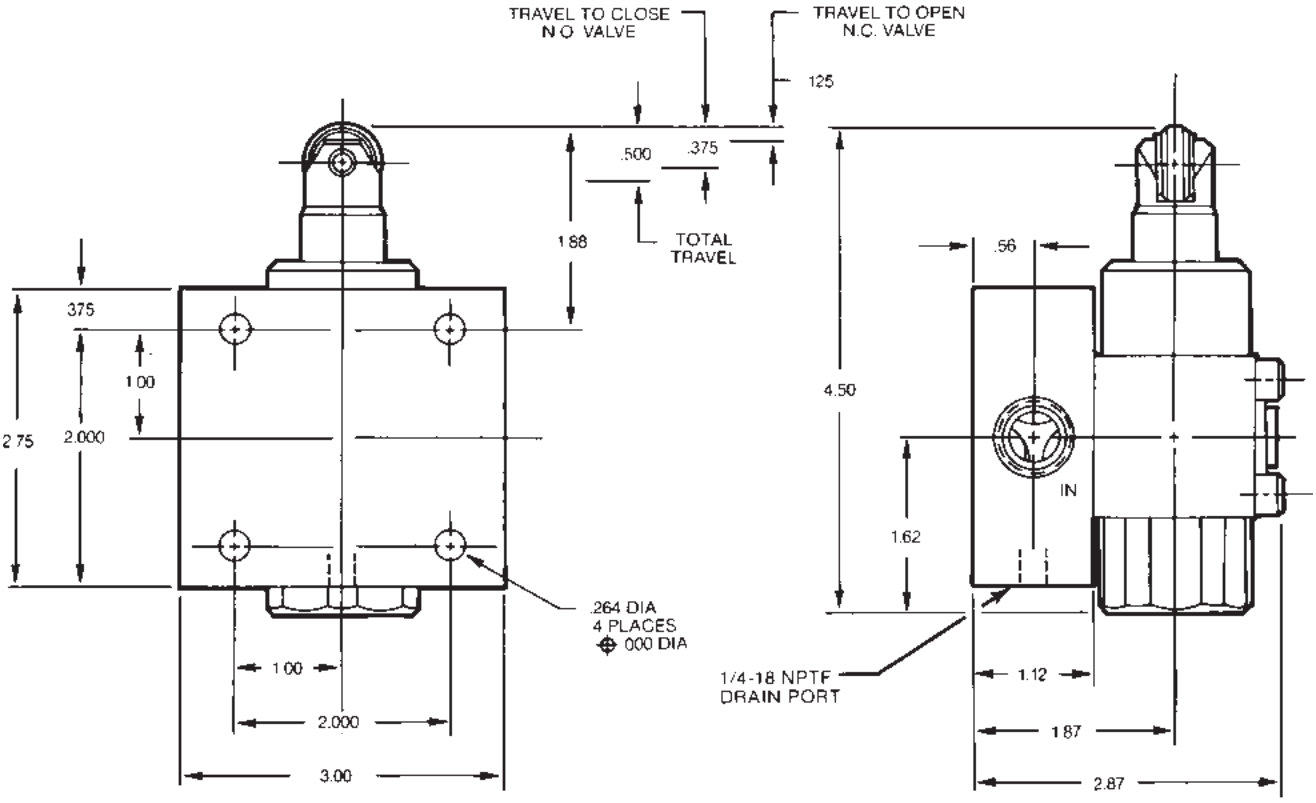

Millimeter equivalents for inch dimensions are shown in (**)

Model DC1200S

In-line mounted Deceleration Valve
with reverse check

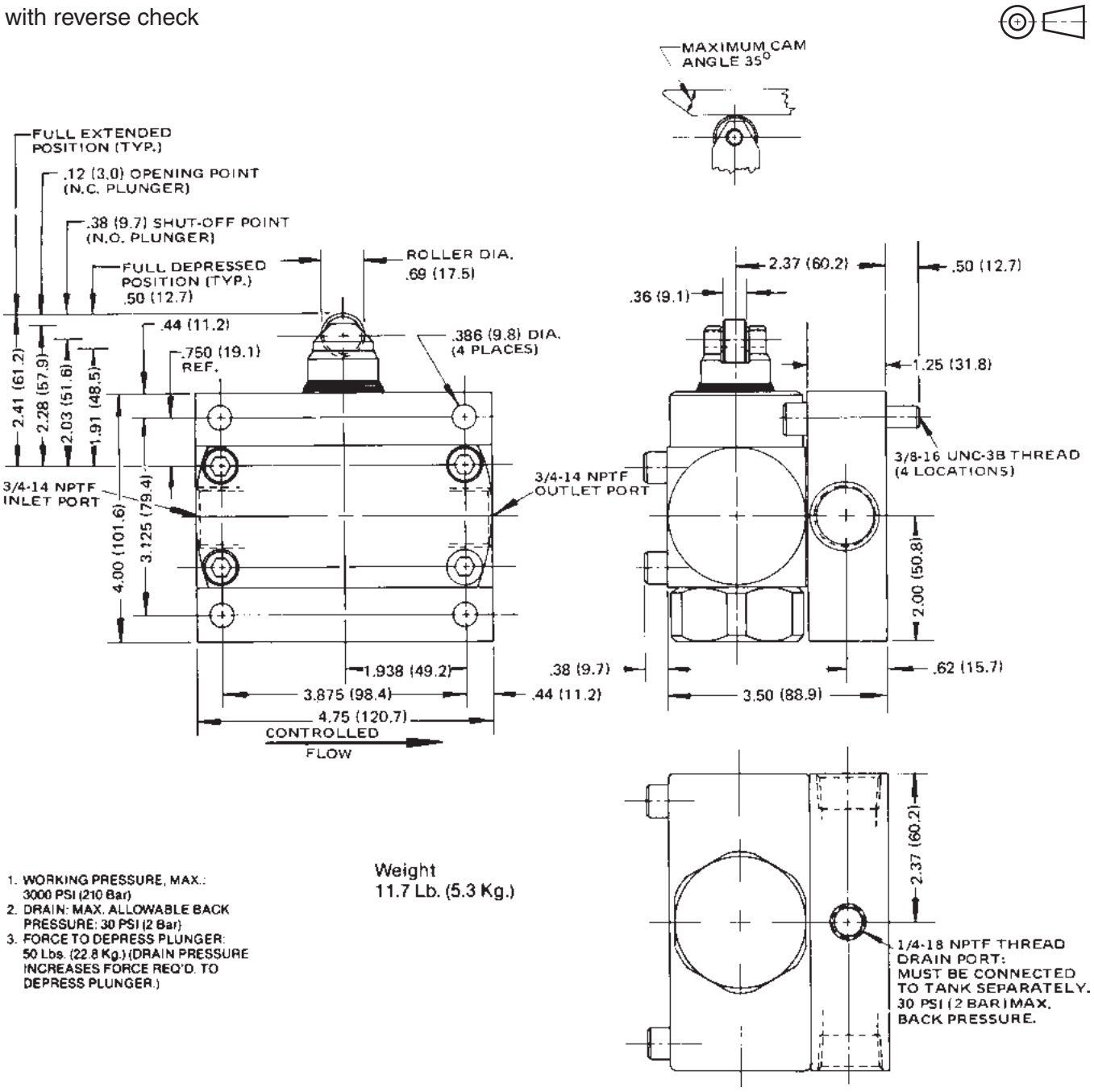

Weight
11.7 Lb. (5.3 Kg.)

1. WORKING PRESSURE, MAX.: 3000 PSI (210 Bar)
2. DRAIN: MAX. ALLOWABLE BACK PRESSURE: 30 PSI (2 Bar)
3. FORCE TO DEPRESS PLUNGER: 50 Lbs. (22.8 Kg.) (DRAIN PRESSURE INCREASES FORCE REQ'D. TO DEPRESS PLUNGER.)

D

Millimeter equivalents for inch dimensions are shown in (**)

Model DCS1200S

Manifold mounted Deceleration Valve
with reverse check

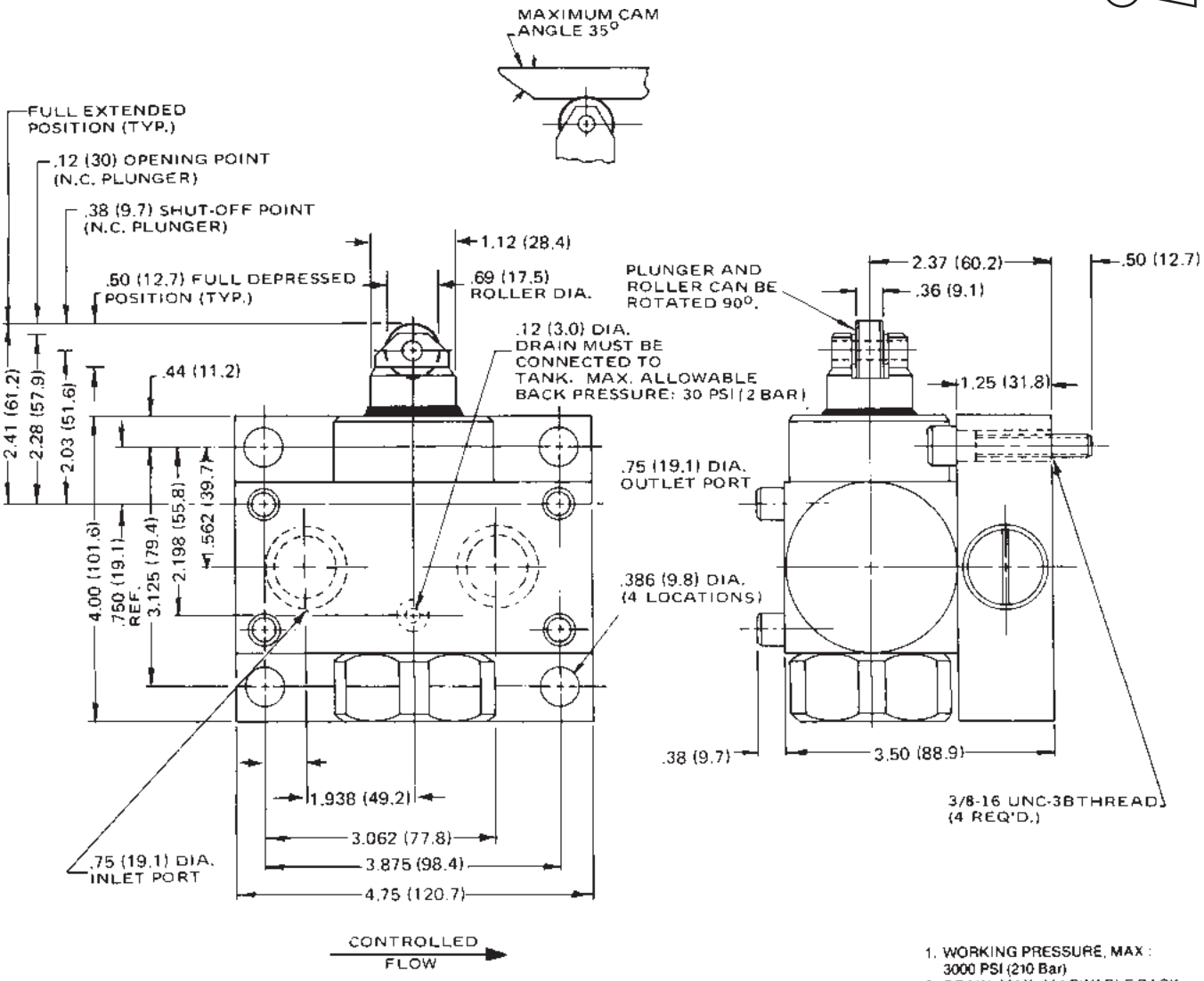

1. WORKING PRESSURE, MAX : 3000 PSI (210 Bar)
2. DRAIN: MAX. ALLOWABLE BACK PRESSURE: 30 PSI (2 Bar)
3. FORCE TO DEPRESS PLUNGER: 50 Lbs. (22.8 Kg.) (DRAIN PRESSURE INCREASES FORCE REQ'D TO DEPRESS PLUNGER.)

Dimensions are shown in inches

Model DF600S

In-line mounted Deceleration Valve
with reverse check and bypass needle

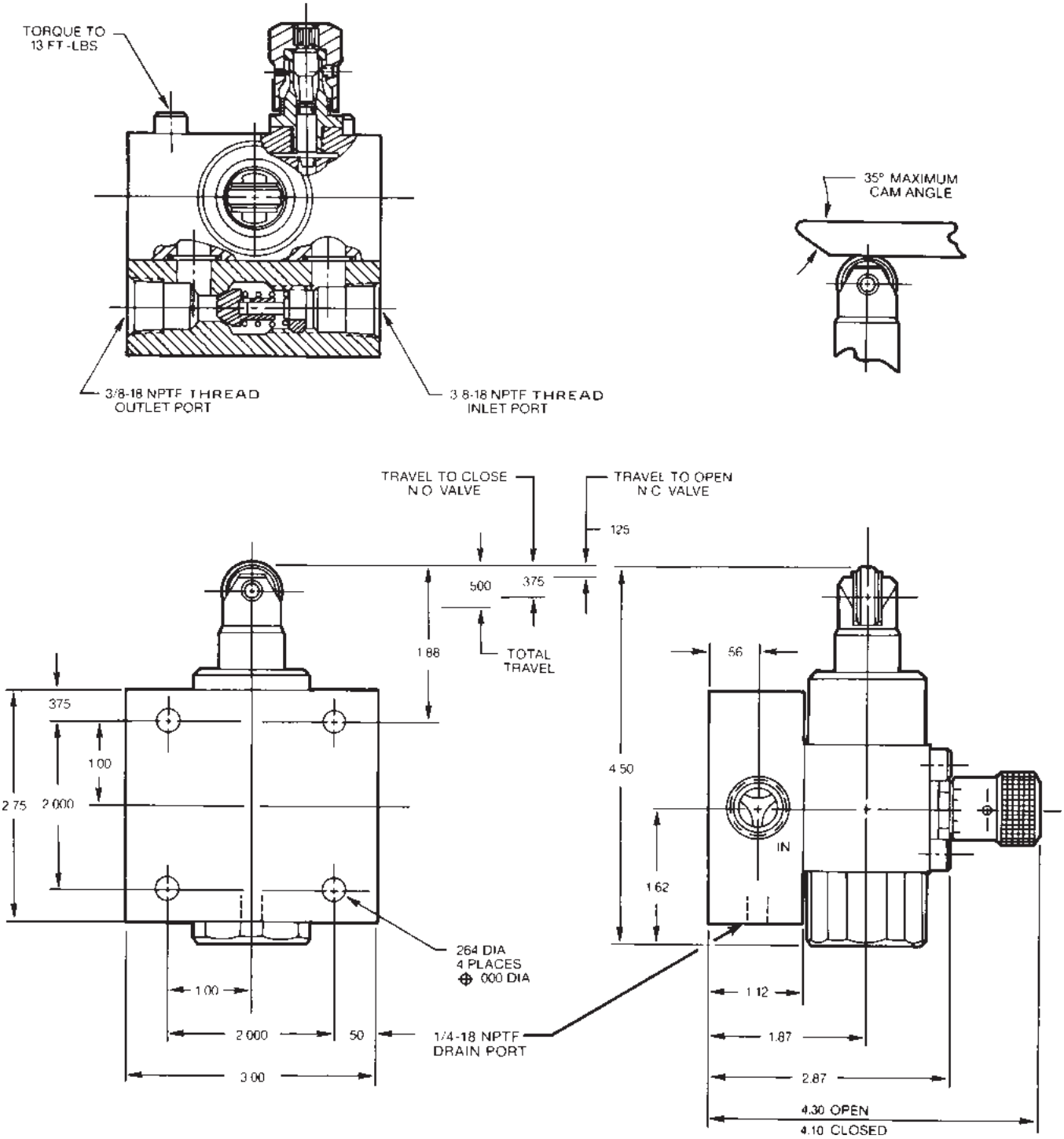

3000-D1.p65, dd

Parker Hannifin Corporation
Hydraulic Valve Division
Elyria, Ohio, USA

Millimeter equivalents for inch dimensions are shown in (**)

Model DF1200S

In-line mounted Deceleration Valve
with reverse check and bypass needle

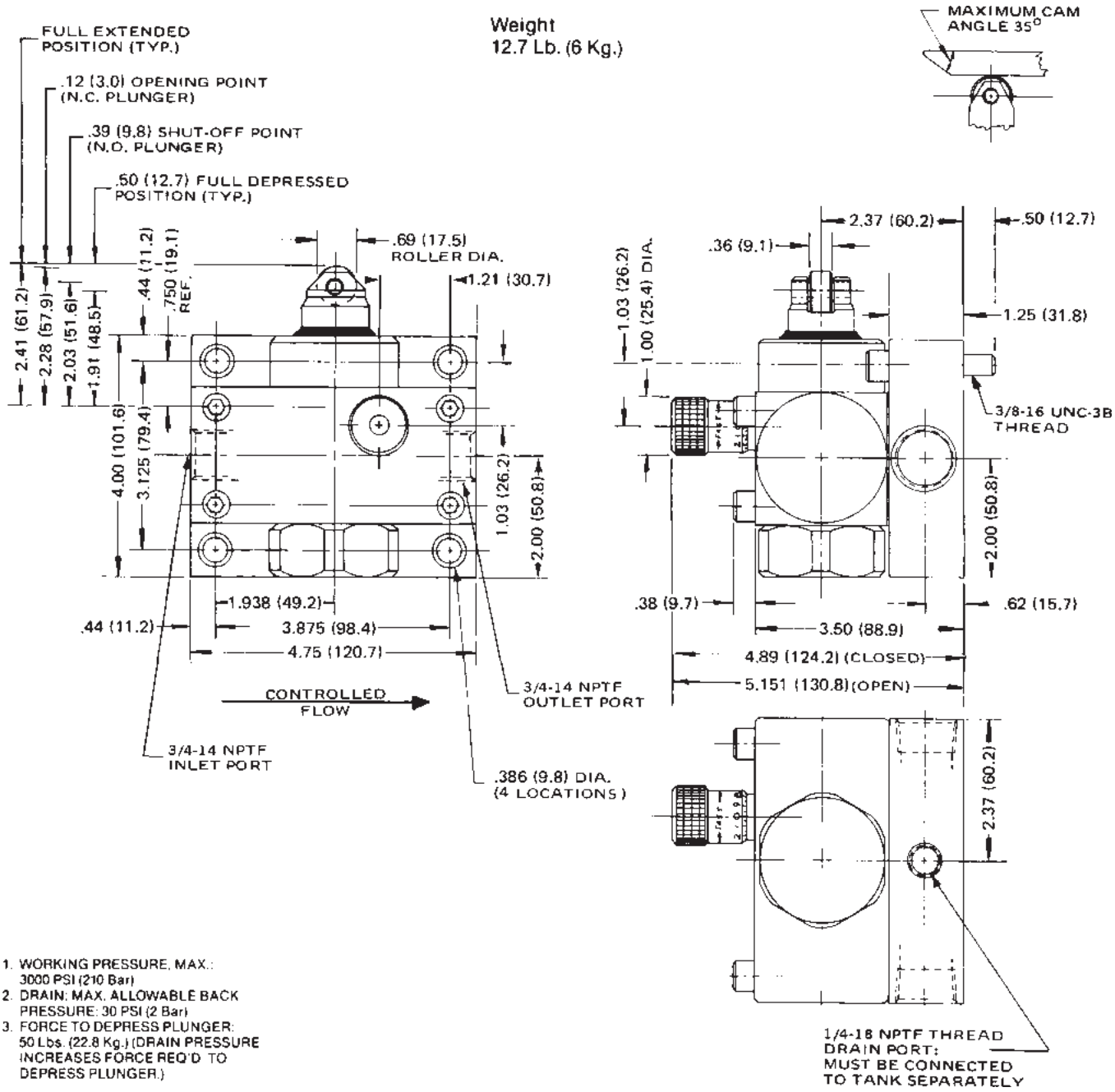

1. WORKING PRESSURE, MAX.: 3000 PSI (210 Bar)
2. DRAIN: MAX. ALLOWABLE BACK PRESSURE: 30 PSI (2 Bar)
3. FORCE TO DEPRESS PLUNGER: 50 Lbs. (22.8 Kg.) (DRAIN PRESSURE INCREASES FORCE REQ'D TO DEPRESS PLUNGER.)

Millimeter equivalents for inch dimensions are shown in (**)

Model DFS1200S

Manifold mounted Deceleration Valve
with reverse check and bypass needle

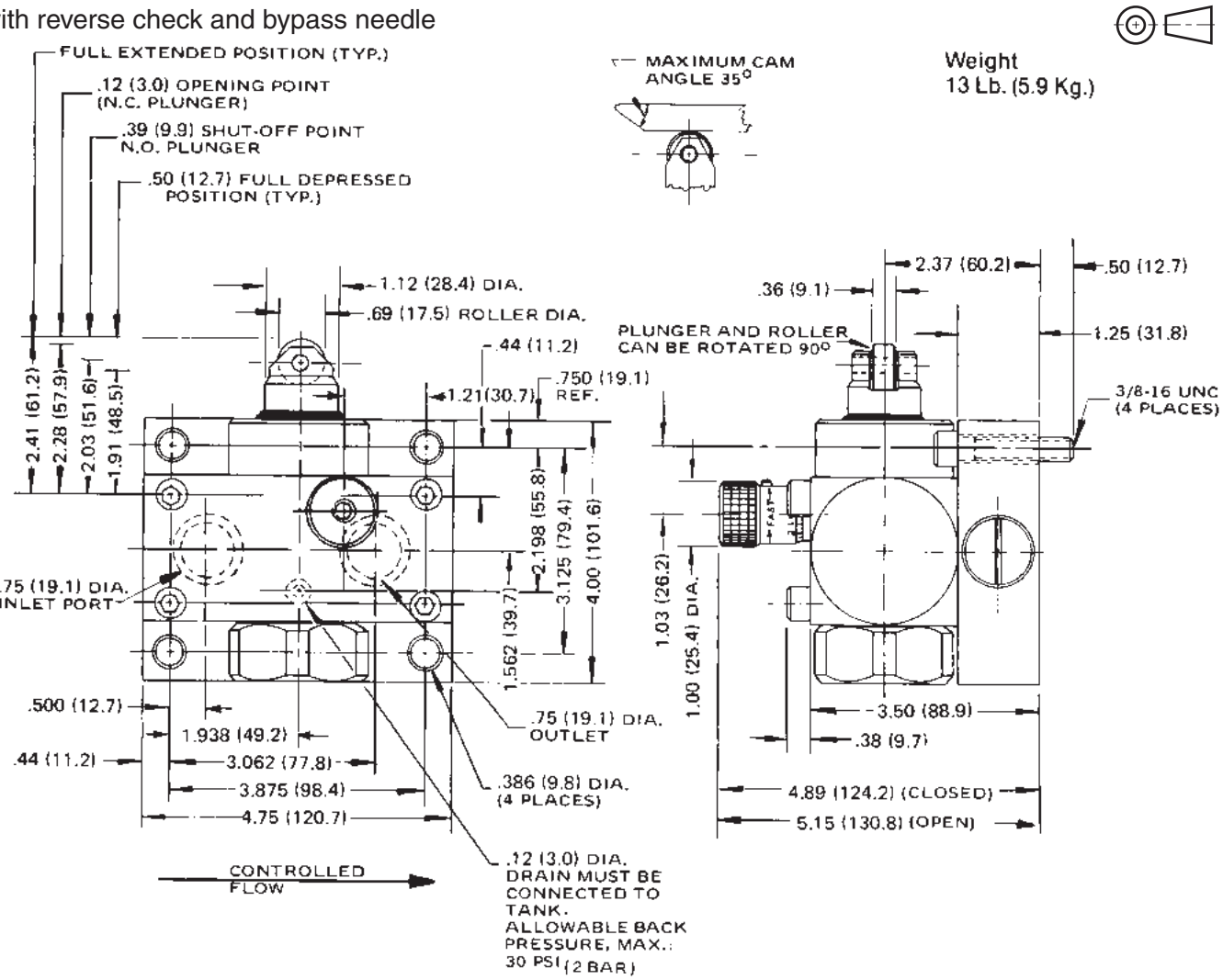

1. WORKING PRESSURE, MAX.: 3000 PSI (210 Bar)
2. DRAIN: MAX. ALLOWABLE BACK PRESSURE: 30 PSI (2 Bar)
3. FORCE TO DEPRESS PLUNGER: 50 Lbs. (22.8 Kg.) (DRAIN PRESSURE INCREASES FORCE REQ'D. TO DEPRESS PLUNGER.)

General Description

Series NS needle valves provide excellent speed conrol and shutoff for hydraulic applications where a reverse-flow check valve is not required. They also take minimum space for installation, conserving space.

The two-step needle valve allows fine tuning at low flow with the first three turns of the adjusting knob, with full-open flow plus conventional precision throttling with the final three turns of the knob.

Exclusive “Colorflow” color bands permit fast, accurate setting and time-saving return to a previous setting.

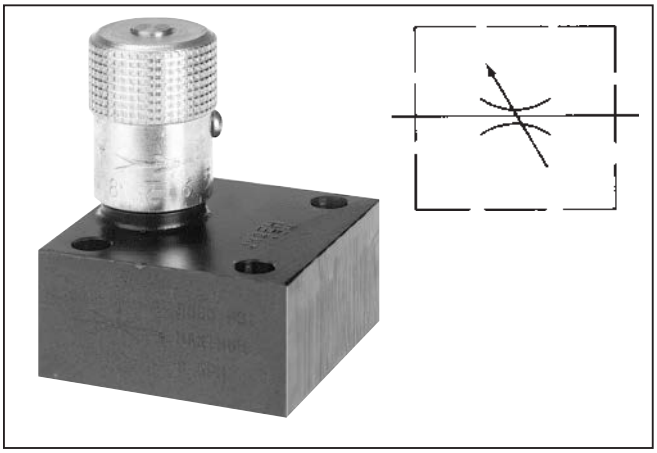

D

Specfications

Maximum Operating Pressure	210 Bar (3000 PSI)
Needles	Standard Needle on all models Fine needle optional on Models NS400 and NS600
Nominal Flow	D600 37.9 LPM (10 GPM) D1200 132.5 LPM (35 GPM)
Port Configurations	See dimensional drawings and/or ordering information for configuration availability

Features

- The exclusive “Colorflow” color-band reference scale on the valve stem is a great convenience and time-saver in setting the valve originally and in returning it to any previous setting.
- A simple set screw locks the valve on any desired setting.

Flow Data

Valve Model	Flow, Max. GPM (L/M)	Orifice Area Control Flow (Sq. In.)	Effective Control Flow CV	Port Size
NS400	5 (19)	.0194	.443	1/4
NS600	8 (30)	.0344	.787	3/8
NS800	15 (57)	.0427	.976	1/2
NS1200	25 (95)	.1080	2.470	3/4
NS1600	40 (151)	.2300	5.250	1

Performance Curves

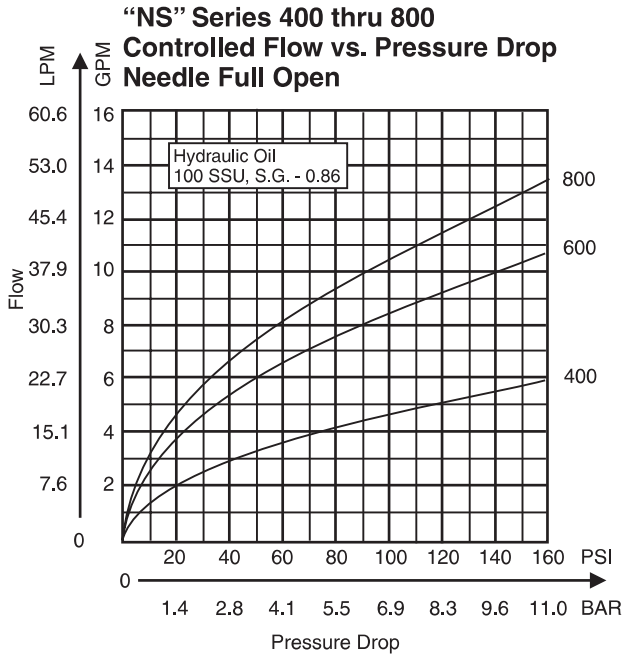

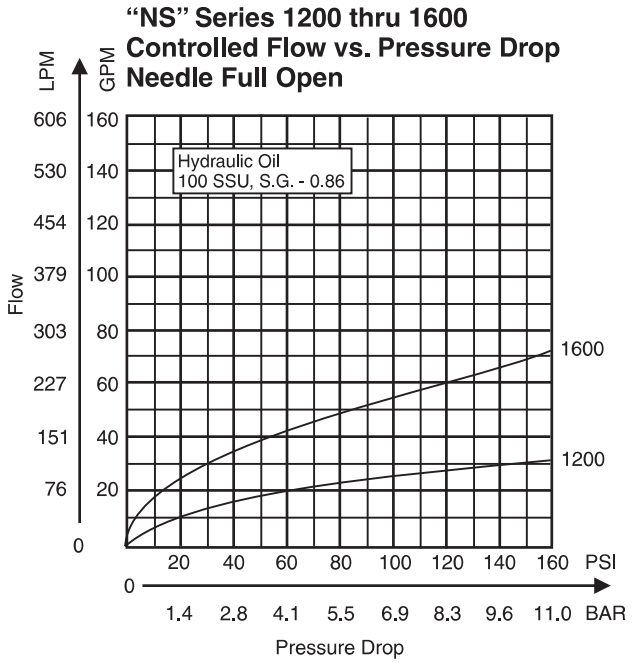

3000-D1.p65, dd

Parker Hannifin Corporation
Hydraulic Valve Division
Elyria, Ohio, USA

NS		S			
Mounting	Size	Material	Needle Option	Knob Option	Seal Material

NS*	Subplate

*Steel only

400	1/4"
600	3/8"
800	1/2"
1200	3/4"
1600	1"

S	Steel

Omit	Standard
4	Fine*

*Models 400, 600

Omit	Standard
T	Tamperproof
F	Finger Screw

Omit	Nitrile
V	Fluorocarbon

D

Bolt Kits

Valve	Bolt Kit	Bolt Specification*	Bolt Torque
NS400	BK01	1/4-20 x 1-1/4"	9 Ft.-Lbs.
NS600	BK02	1/4-20 x 1-1/2"	9 Ft.-Lbs.
NS800	BK02	1/4-20 x 1-1/2"	9 Ft.-Lbs.
NS1200	BK05	5/16-18 x 1-3/4"	19 Ft.-Lbs.
NS1600	BK08	5/16-18 x 2-1/4"	19 Ft.-Lbs.

*Use SAE Grade 8 or Better.

Knob Options

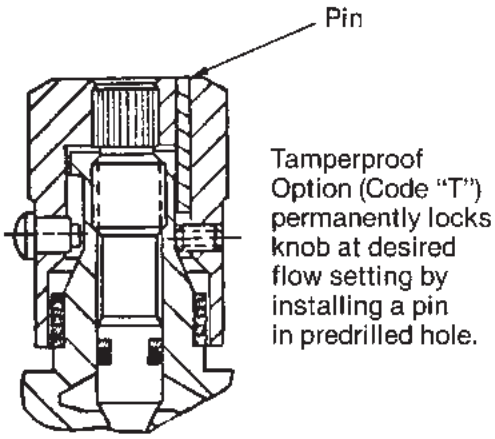

Tamperproof Option (Code "T") permanently locks knob at desired flow setting by installing a pin in predrilled hole.

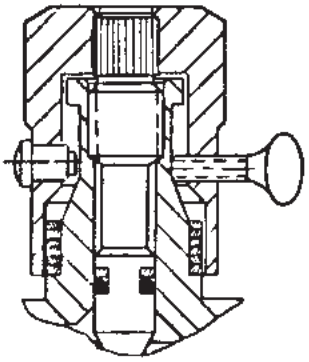

Finger screw option (Code "F") provides this thumbscrew in place of set screw.

3000-D1.p65, dd

Parker Hannifin Corporation
Hydraulic Valve Division
Elyria, Ohio, USA

D

Millimeter equivalents for inch dimensions are shown in (**)

Models NS400S through NS1600S

Manifold mounted Needle Valves

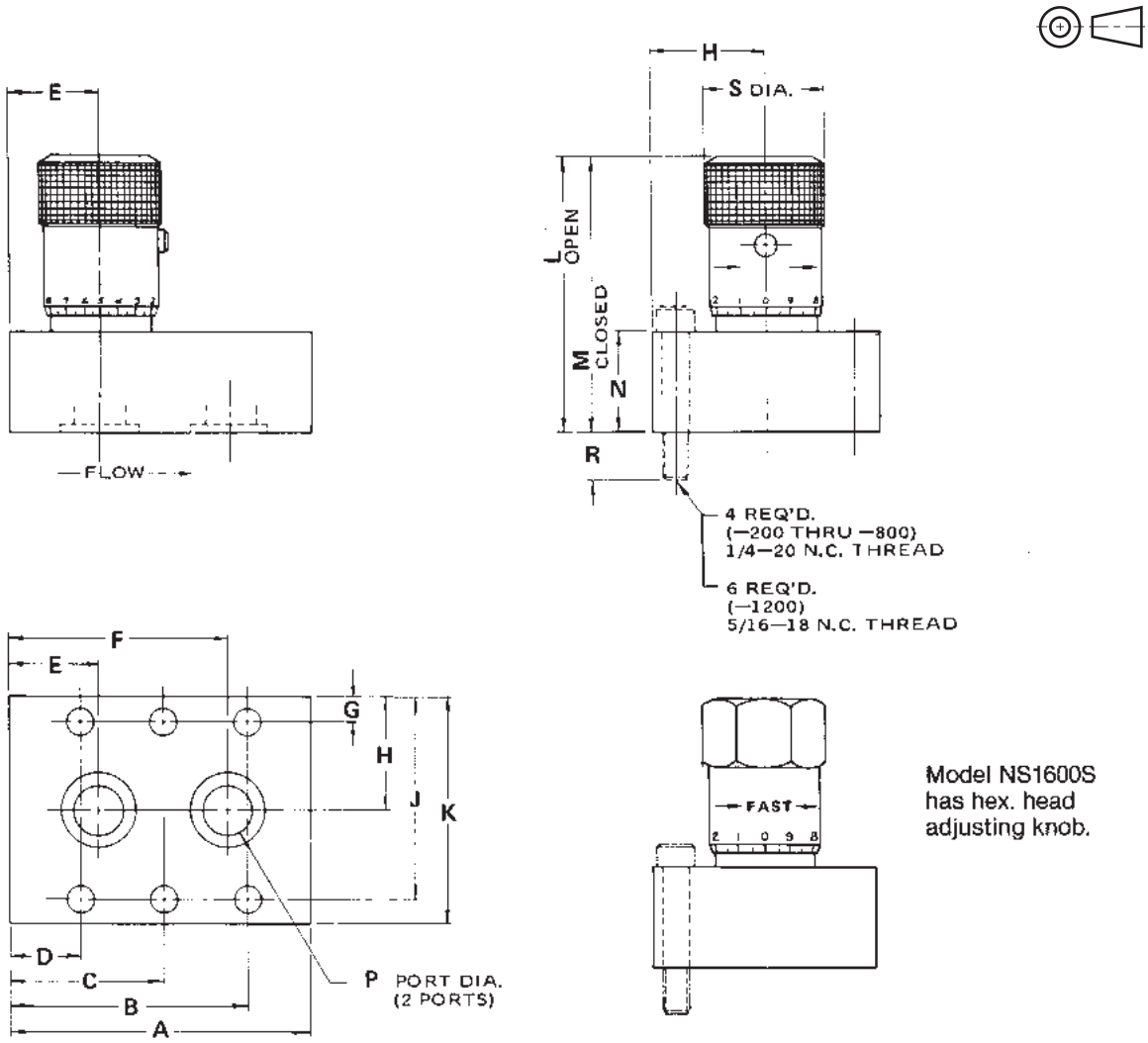

Valve Model	A	B	C	D	E	F	G	H	J	K	L	M	N	P	R	S	Weight Lb. (Kg)
NS400S	1.88 (47.8)	1.62 (41.1)		.25 (6.4)	.44 (11.2)	1.44 (36.6)	.22 (5.6)	.88 (22.4)	1.53 (38.9)	1.75 (44.5)	2.15 (54.6)	1.95 (49.5)	.88 (22.4)	.28 (7.1)	.44 (11.2)	.81 (20.6)	0.8 (0.4)
NS600S	2.00 (50.8)	1.66 (42.2)		.34 (8.6)	.50 (12.7)	1.50 (38.1)	.25 (6.4)	1.00 (25.4)	1.75 (44.5)	2.00 (50.8)	2.65 (67.3)	2.40 (61.0)	1.00 (25.4)	.34 (8.6)	.50 (12.7)	1.00 (25.4)	1.3 (0.6)
NS800S	2.97 (75.4)	2.23 (56.6)		.73 (18.5)	.89 (22.6)	2.08 (52.8)	.25 (6.4)	1.12 (28.4)	2.00 (50.8)	2.25 (57.2)	3.04 (77.2)	2.75 (69.9)	1.00 (25.4)	.47 (11.9)	.50 (12.7)	1.18 (30.0)	2.3 (1.0)
NS1200S	3.69 (93.7)	3.34 (84.8)	1.84 (46.7)	.34 (8.6)	.78 (19.8)	2.92 (74.2)	.31 (7.9)	1.38 (35.1)	2.44 (62.0)	2.75 (69.9)	3.72 (94.5)	3.13 (79.3)	1.12 (28.4)	.66 (16.8)	.63 (16.0)	1.37 (34.8)	3.7 (2.0)
NS1600S	4.38 (111.3)	4.06 (100.1)	2.19 (55.6)	.31 (7.9)	1.06 (26.9)	3.31 (84.1)	.31 (7.9)	1.50 (38.1)	2.69 (68.3)	3.00 (76.2)	5.51 (140.0)	4.85 (123.2)	1.75 (44.5)	.88 (22.4)	.50 (12.7)	1.87 (47.5)	8.0 (4.0)

3000-D1.p65, dd

Parker Hannifin Corporation
Hydraulic Valve Division
Elyria, Ohio, USA

Millimeter equivalents for inch dimensions are shown in (**)

Subplate

Reference Data Only
(Subplates are not available)

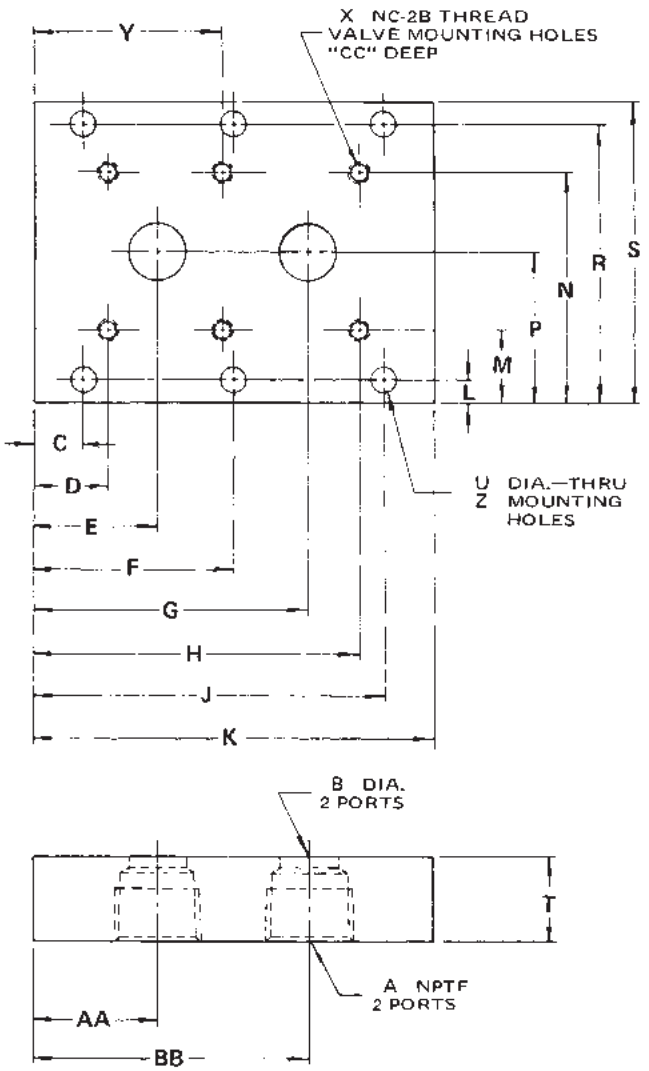

	Valve Series				
	NS -400	NS -600	NS -800	NS -1200	NS -1600
NPTF Port Size	1/4	3/8	1/2	3/4	1
B	.281 (7.1)	.406 (10.3)	.469 (11.9)	.656 (16.7)	.875 (22.2)
C	.375 (9.5)	.375 (9.5)	.500 (12.7)	.344 (8.7)	.344 (8.7)
D	.562 (14.3)	.843 (21.4)	.875 (22.2)	.750 (19.1)	1.125 (28.6)
E	.750 (19.1)	1.000 (25.4)	1.031 (26.2)	1.188 (30.2)	1.875 (47.6)
G	1.750 (44.5)	2.000 (50.8)	2.219 (56.4)	3.312 (84.1)	4.125 (104.8)
H	1.938 (49.2)	2.156 (54.8)	2.375 (60.3)	3.750 (95.3)	4.875 (123.8)
J	2.125 (54.0)	2.625 (66.7)	2.750 (69.9)	4.156 (105.6)	5.656 (143.6)
K	2.50 (63.5)	3.00 (76.2)	3.25 (82.6)	4.50 (114.3)	6.00 (152.4)
L	.344 (8.7)	.250 (6.4)	.438 (11.1)	.344 (8.7)	.344 (8.7)
M	.844 (21.4)	.750 (19.1)	1.125 (28.6)	1.062 (27.0)	1.062 (27.0)
N	2.156 (54.8)	2.250 (57.2)	2.875 (73.0)	3.188 (81.0)	3.438 (87.3)
P	1.500 (38.1)	1.500 (38.1)	2.000 (80.8)	2.125 (54.0)	2.250 (57.2)
R	2.656 (67.5)	2.750 (69.9)	3.562 (90.5)	3.906 (99.2)	4.156 (105.6)
S	3.00 (76.2)	3.00 (76.2)	4.00 (101.6)	4.25 (108.0)	4.50 (114.3)
T	1.125 (28.6)	1.125 (28.6)	1.125 (28.6)	1.125 (28.6)	1.250 (31.8)
U	.281 (7.1)	.281 (7.1)	.359 (9.1)	.422 (10.7)	.422 (10.7)
X	1/4-20	1/4-20	1/4-20	5/16-18	5/16-18
Y	—	—	—	2.250 (57.2)	3.000 (76.2)
Z	4 Holes	4 Holes	4 Holes	6 Holes	6 Holes
AA	.750 (19.1)	1.000 (25.4)	1.031 (26.2)	1.188 (30.2)	1.875 (47.6)
BB	1.750 (44.5)	2.000 (50.8)	2.219 (56.4)	3.312 (84.5)	4.125 (104.8)
CC	.505 (12.8)	.525 (13.3)	.525 (13.3)	.525 (13.3)	.525 (13.3)

Return to ALPHA TOC
Return to SECTION TOC

Pressure Control Valves

Parker Hannifin Corporation
Hydraulic Valve Division
Elyria, Ohio, USA

General Description

Series 620 - 649 in-line pressure control valves open the system to tank when the system pressure reaches the pressure setting of the control valve. The pressure setting is externally adjustable so that it can be tuned accordingly within its range. However, the valve can be factory set to a specified pressure setting.

Specifications

Service App.	Hydraulic and Pneumatic
Maximum Operating Pressure	Working: 0.3 to 248.4 Bar (4 to 3600 PSI) in 13 ranges Reseat: Range 1: 80% of cracking press. Ranges 2 - 13: 90% of cracking pressure
Sizes	NPT 1/4", 1/2", 3/4" IST SAE 6, SAE 10, SAE 12 FLD SAE 6, SAE 10, SAE 12
Ports	NPT Pipe threads IST Internal straight threads FLD Flared Tube Connection SAE 37°
Material	Body, Cap Brass, aluminum alloy, stainless steel Finish Aluminum alloy, anodized; stainless steel Poppet 416 Stainless Steel (Hard seat) 303 Stainless Steel (Soft seat) Seat (soft) Ranges 1 -3: Synthetic rubber - Code 2 Ranges 4 - 13: PTFE Spring Stainless steel Cap O-ring Synthetic rubber
Operating Temperature	-40°C to +121°C (-40°F to +250°F) Higher on special order

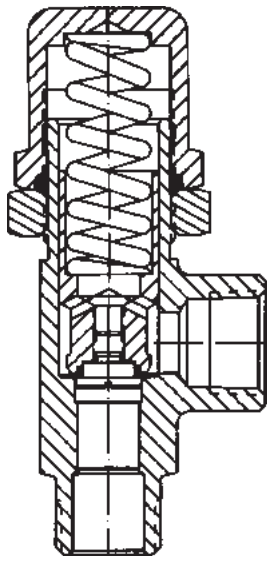

Soft Seat

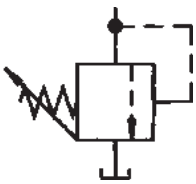

Hard Seat
available only in
Brass and Stainless Steel

Features

- Externally adjustable.
- Available for hydraulic or pneumatic service.
- Quick response for venting applications.

Dimensions – Inch equivalents for millimeter dimensions are shown in (**)

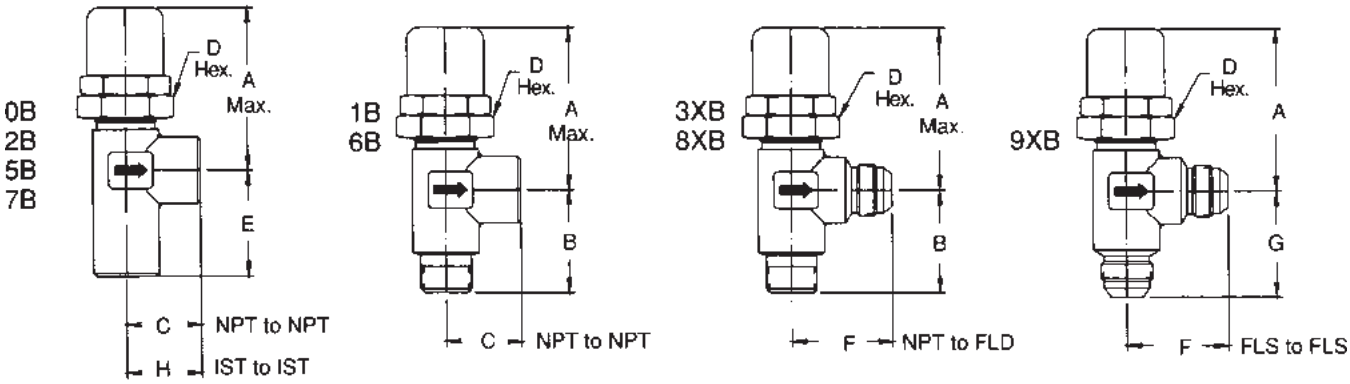

Valve Size		Dimensions								Maximum Rated Flow LPM (GPM)	Weights (Approx.)		
Pipe	Tube	A	B	C	D	E	F	G	H		Allum. Alloy	Brass	Stainless Steel
1/4	6	60.3 (2.38)	34.9 (1.38)	27.0 (1.06)	31.8 (1.25)	32.5 (1.28)	36.5 (1.44)	38.1 (1.50)	27.0 (1.06)	15.1 (4.0)	4 oz.	10 oz.	12 oz.
1/2	10	94.5 (3.72)	54.0 (2.13)	38.1 (1.50)	44.5 (1.75)	54.8 (2.16)	52.4 (2.06)	55.6 (2.19)	38.1 (1.50)	37.9 (10.0)	14 oz.	2 lbs. 2 oz.	2 lbs. 4 oz.
3/4	12	94.5 (3.72)	54.0 (2.13)	39.7 (1.56)	44.5 (1.75)	55.6 (2.19)	53.2 (2.09)	55.6 (2.19)	39.7 (1.56)	56.8 (15.0)	14 oz.	2 lbs. 2 oz.	2 lbs. 4 oz.

3000-E1.p65, dd

Parker Hannifin Corporation
Hydraulic Valve Division
Elyria, Ohio, USA

☐ Materials — ☐ Type Ports & Type Seals — ☐ Pressure Range — ☐ Size — ☐ O-Ring Code

Code	Description
62	Aluminum (Soft Seat Only)
63	Brass
64	Stainless Steel Type 303

Code	Size
1/4	1/4" NPT
1/2	1/2" NPT
3/4	3/4" NPT
6	(IST or FLD)
10	(IST or FLD)
12	(IST or FLD)

Code	Description
2	Nitrile
28	Fluorocarbon

Code	Inlet	Outlet	Code	Inlet	Outlet
Hard Seat			**Soft Seat**		
0B	IST	IST	5B	IST	IST
1B	NPT	NPT	6B	NPT	NPT
2B	NPT	NPT	7B	NPT	NPT
3XB	NPT	FLD	8XB	NPT	FLD
			629XB only	FLD	FLD

Hard Seat available in Brass and Stainless Steel only.

Code	Description
1	0.3 - 1.0 Bar (4-15 PSI)
2	0.7 - 3.5 Bar (10-50 PSI)
3	2.8 - 8.6 Bar (40-125 PSI)
4	7.9 - 17.3 Bar (115-250 PSI)
5	16.2 - 31.1 Bar (235-450 PSI)
6	29.7 - 44.9 Bar (430-650 PSI)
7	43.5 - 58.7 Bar (630-850 PSI)
8*	43.5 - 70.4 Bar (630-1020 PSI)
9*	55.2 - 103.5 Bar (800-1500 PSI)
10*	96.6 - 144.9 Bar (1400-2100 PSI)
11*	103.5 - 189.8 Bar (1500-2750 PSI)
12*	138.0 - 213.9 Bar (2000-3100 PSI)
13*	207.0 - 248.4 Bar (3000-3600 PSI)

* Hard Seat only.

PTFE seats for Ranges 4, 5, 6 and 7 only.

Pressure Range

Range Bar (PSI)	Pre-Set Cracking Pressure	Soft Seat Material (when used)	Range Dash Number
0.3 - 1.0 Bar (4-15 PSI)	0.7 Bar (10 PSI)	Synthetic Rubber	-1
0.7 - 3.5 Bar (10-50 PSI)	2.4 Bar (35 PSI)	Synthetic Rubber	-2
2.8 - 3.5 Bar (40-125 PSI)	6.2 Bar (90 PSI)	Synthetic Rubber	-3
7.9 - 17.3 Bar (115-250 PSI)	13.8 Bar (200 PSI)	PTFE	-4
16.2 - 31.1 Bar (235-450 PSI)	24.8 Bar (360 PSI)	PTFE	-5
29.7 - 44.9 Bar (430-650 PSI)	38.0 Bar (550 PSI)	PTFE	-6
43.5 - 58.7 Bar (630-850 PSI)	51.8 Bar 750 PSI)	PTFE	-7
43.5 - 70.4 Bar (630-1020 PSI)	58.7 Bar (850 PSI)	PTFE	-8
55.2 - 103.5 Bar (800-1500 PSI)	69.0 Bar (1000 PSI)	PTFE	-9
96.6 - 144.9 Bar (1400-2100 PSI)	120.8 Bar (1750 PSI)	PTFE	-10
103.5 - 189.8 Bar (1500-2750 PSI)	151.8 Bar (2200 PSI)	PTFE	-11
138.0 - 213.9 Bar (2000-3100 PSI)	179.4 Bar (2600 PSI)	PTFE	-12
207.0 - 248.4 Bar (3000-3600 PSI)	220.8 Bar (3200 PSI)	PTFE	-13

Definitions:

Cracking pressure – Liquid: 15 tp 20 DPM
Air: steady stream of bubbles

Reseat leakage – Less than 1 DPM or 1 BPM

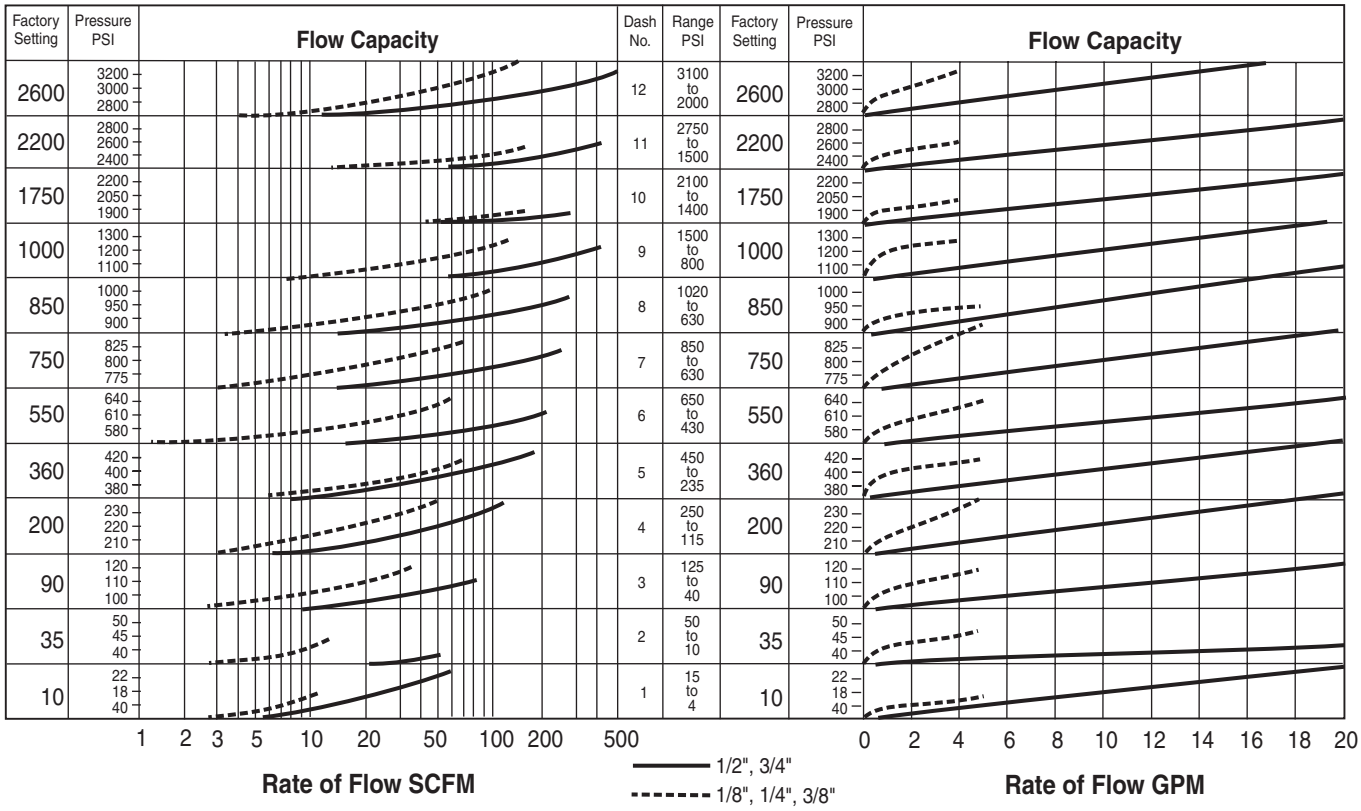

Examples

Pneumatic:

Establish cracking pressure setting of 1/2" valve for flow of 70 SCFM at 27.6 Bar (400 PSI) pressure:

1. Project 70 SCFM on vertical scale.
2. Project 27.6 Bar (400 PSI) scale horizontally intersectiong 1.
3. Project line parallel to curves back to vertical line 1.
4. Read cracking pressure setting: 24.8 Bar (360 PSI).

Hydraulic:

Find amount of pressure increase above 24.8 Bar (360 PSI) cracking pressure when flow through 3/4" valve is increased to 54 LPM (14 GPM):

1. From 360 on vertical pressure scale, follow 3/4" curve until it intersects with the vertical line representing 54 LPM (14 GPM).
2. Project intersecting point horizontally and read pressure, i.e., 29 Bar (420 PSI).
3. Accumulated Pressure:
   420 minus 360 = 4.1 Bar (60 PSI).

General Description

Series 665 relief valves are adjustable, in-line direct-acting relief valves. The valve opens when the system pressure exceeds the pressure at which the valve is set.

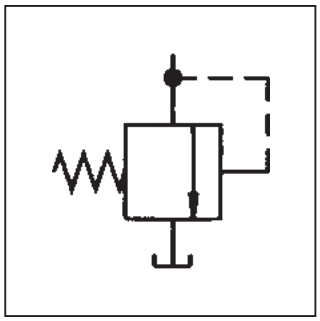

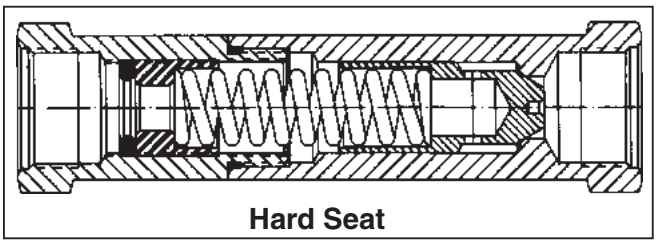

Hard Seat

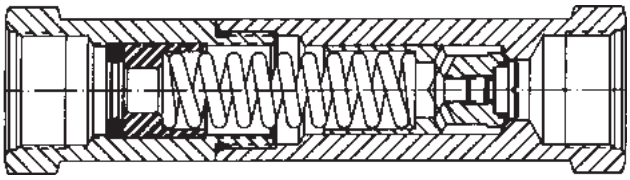

Soft Seat

Specifications

Service App.	Hard seat:	Hydraulic
	Soft seat:	Hydraulic and air
Maximum Operating Pressure	Working:	0.3 to 248.4 Bar (4 to 3600 PSI) in 13 ranges
	Reseat:	Range 1: 80% of cracking press. Ranges 2 - 13: 90% of cracking pressure
	Proof:	310.5 Bar (4500 PSI)
Sizes	NPT	1/4", 1/2", 3/4", 1"
Ports	NPT	Pipe threads
	IST	Internal straight threads
Material	Body, Cap	Aluminum alloy, anodized Stainless steel
	Poppet, Adj. Screw	416 Stainless Steel (Hard seat) 303 Stainless Steel (Soft seat)
	Locknut	303 Stainless steel
	Spring	Stainless steel AMS5688 and 17-7PH
	O-ring	Synthetic rubber
	Seat (soft)	Ranges 1 -3: Synthetic rubber Ranges 4 - 13: PTFE
Operating Temperature	-40°C to +121°C (-40°F to +250°F) Higher on special order	

Features

- Internal adjustment ideal for tamper-proof applications.
- Available for hydraulic or pneumatic service.
- In-line design saves space in power unit application.

Ordering Information

S	665	-1	-1/8	D	2
Options	Catalog Number	Pressure Range	Size	Materials	O-Ring Code
S Soft Seat	665 Inline Direct-Acting Relief	1 4 - 15 PSI 2 10 - 50 PSI 3 40 - 125 PSI 4 115 - 250 PSI 5 235 - 450 PSI 6 430 - 650 PSI 7 630 - 850 PSI † 8 630 - 1020 PSI † 9 800 - 1500 PSI † 10 1400 - 2100 PSI † 11 1500 - 2750 PSI † 12 2000 - 3100 PSI † 13 3000 - 3600 PSI ML* MH**	1/8 NPT 1/4 NPT 3/8 NPT 1/2 NPT 3/4 NPT 1 NPT 4 IST 6 IST 8 IST 12 IST 16 IST	D Aluminum Alloy SS Stainless Steel	2 Nitrile Others Available

Pressure Range

Range PSI	Pre-Set Cracking Pressure	Soft Seat Material (when used)	Range Dash Number
4-15	10	Synthetic Rubber	-1
10-50	35		-2
40-125	90		-3
115-250	200	PTFE	-4
235-450	360		-5
430-650	550		-6
630-850	750		-7
630-1020	850		-8
800-1500	1000		-9
1400-2100	1750		-10
1500-2750	2200		-11
2000-3100	2600		-12
3000 - 3600	3200		-13

† NOTE: Ranges 8 and above – Hard Seat only
Teflon seats for Ranges 4, 5, 6 and 7 only

Definitions:
Cracking pressure – Liquid: 15 to 20 DPM
Air: steady stream of bubbles
Reseat leakage – Less than 1 DPM or 1 BPM

3000-E1.p65, dd

Parker Hannifin Corporation
Hydraulic Valve Division
Elyria, Ohio, USA

Performance Curves

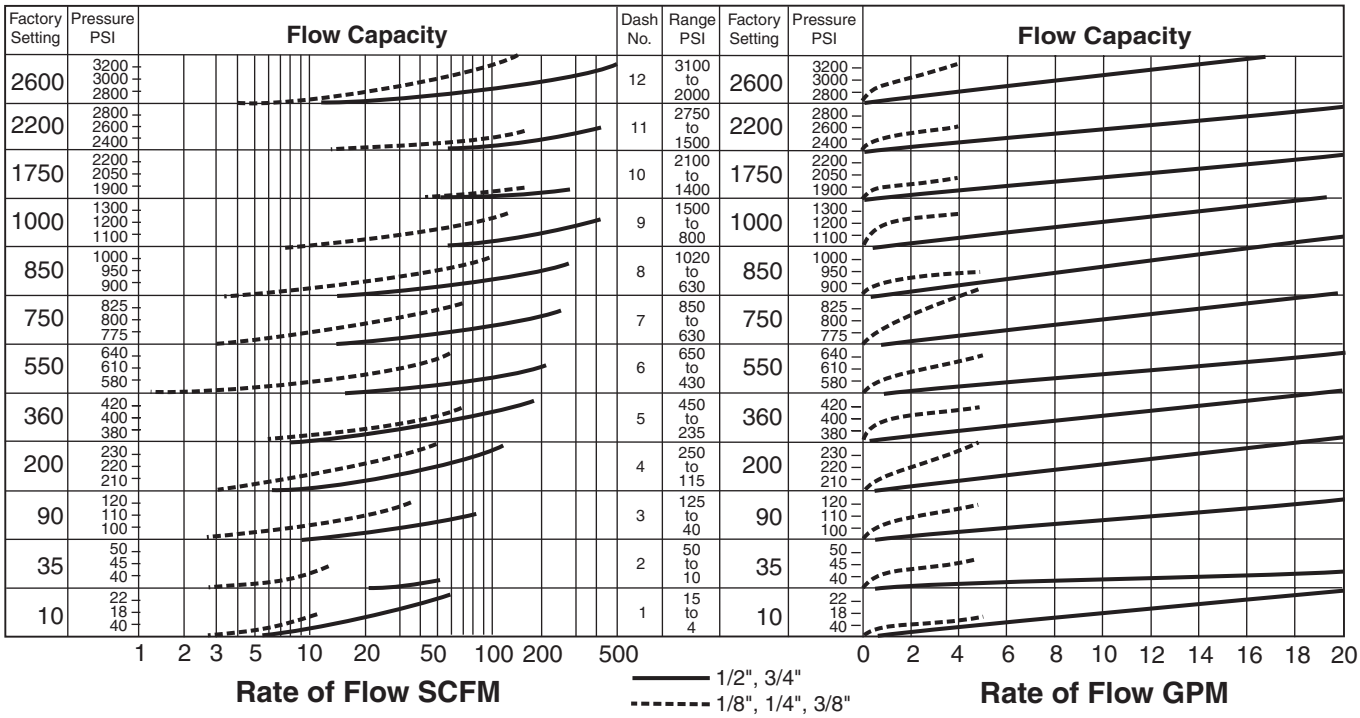

Examples

Pneumatic:

Establish cracking pressure setting of 1/2" valve for flow of 70 SCFM at 27.6 Bar (400 PSI) pressure:

1. Project 70 SCFM on vertical scale.
2. Project 27.6 Bar (400 PSI) scale horizontally intersectiong 1.
3. Project line parallel to curves back to vertical line 1.
4. Read cracking pressure setting: 24.8 Bar (360 PSI).

Hydraulic:

Find amount of pressure increase above 24.8 Bar (360 PSI) cracking pressure when flow through 3/4" valve is increased to 54 LPM (14 GPM):

1. From 360 on vertical pressure scale, follow 3/4" curve until it intersects with the vertical line representing 54 LPM (14 GPM).
2. Project intersecting point horizontally and read pressure, i.e., 29 Bar (420 PSI).
3. Accumulated Pressure:
   420 minus 360 = 4.1 Bar (60 PSI).

Dimensions – Shown in inches

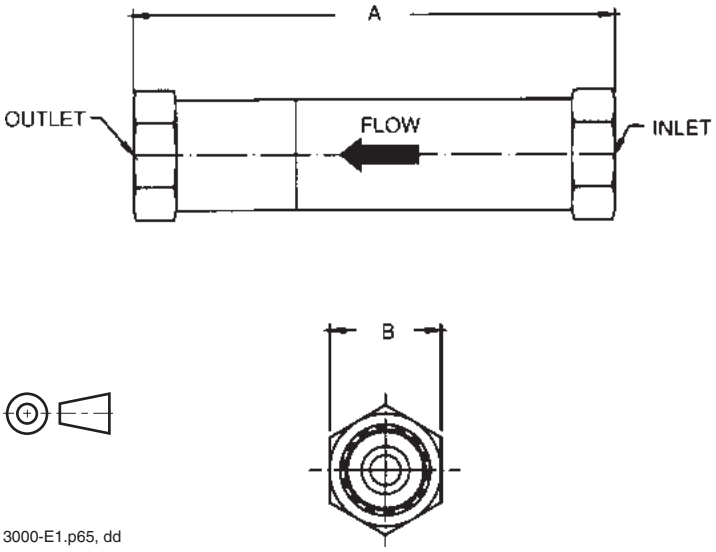

Valve Size NPT	A	B	Maximum Rated Flow G.P.M.	Weights (Approx.) Aluminum Alloy	Weights (Approx.) Stainless Steel
1/4	5	1 3/16	4	0.6 Lbs.	1.3 Lbs.
1/2	5	1 3/16	10		
3/4	7	1 5/8	15	1.7 Lbs.	3.2 Lbs.
1	7	1 5/8	15		

3000-E1.p65, dd

Parker Hannifin Corporation
Hydraulic Valve Division
Elyria, Ohio, USA

General Description

Series RA and RAS direct operated relief valves are often used for pop-off protection against overpressure on systems where normal overpressures are relieved by other relief valves such as Series RP and RM types.

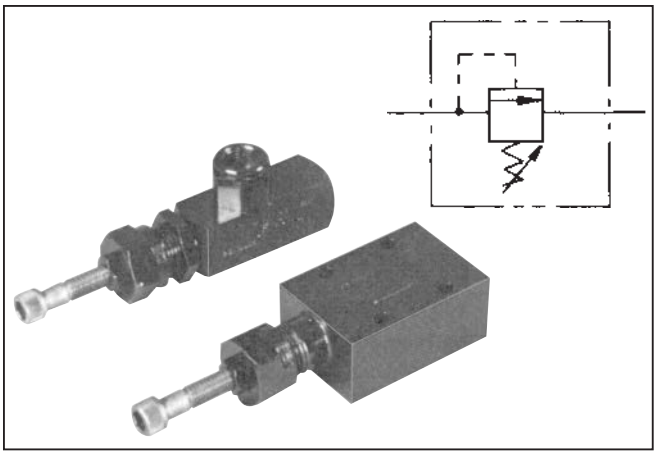

Features

- Available in two sizes: 3/8" and 3/4".
- In-line or subplate mounted, in any position.
- Panel mounting nut provided with each Series RA valve.

Specifications

Pressure Adjustment Ranges	Min. - 17 Bar (Minimum - 250 PSI) 17 - 35 Bar (250 - 500 PSI) 35 - 70 Bar (500 - 1000 PSI) 70 - 140 Bar (100 - 2000 PSI)
Maximum Operating Pressure	210 Bar (3000 PSI)

E

Flow Data

Valve Model	Port Size, In.	Flow, Max. GPM (L/M)	Mounting
RA600S	3/8-NPTF	8 (30)	Inline
RA(S)600S	3/8-NPTF subplate port	8 (30)	Subplate
RA1200S	3/4-NPTF	20 (76)	Inline

Ordering Information

Example: "RA600S3" means Model RA Direct-operated, Pressure-control relief valve, inline model, 3/8," steel, 500-1000 PSI pressure range.

Bolt Kits

Model	Bolt Kit No.	Bolts	Torque
RAS 600S	BK04	1/4-20 x 1-3/4 SAE grade 8 or better	13 Ft. Lb.

RA — RELIEF VALVE

MOUNTING

Omit	Inline (NPTF)
S	Subplate

SIZE

600	3/8"
1200*	3/4"

*Inline only

S — MATERIAL

S	Steel

PRESSURE RANGE

1	Min. to 250 PSI
2	250 to 500 PSI
3	500 to 1000 PSI
4	1000 to 2000 PSI

SEALS

Omit	Nitrile
V	Fluorocarbon

3000-E1.p65, dd

Parker Hannifin Corporation
Hydraulic Valve Division
Elyria, Ohio, USA

Performance Curves

All relief valves are subject to override. For a given valve setting and flow, any change in flow will cause a change in relief pressure. See curves (relief pressure vs: flow).

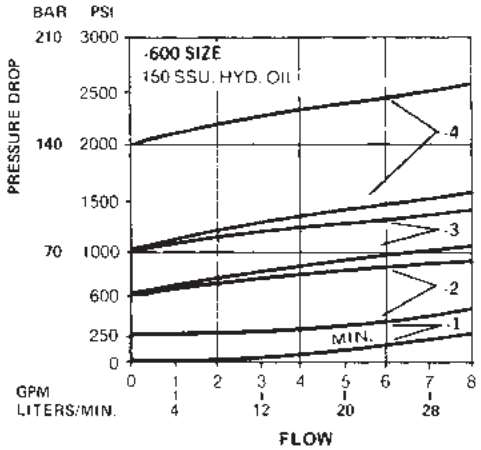

OVERRIDE CURVES
MODELS RA600S and RA(S)600S

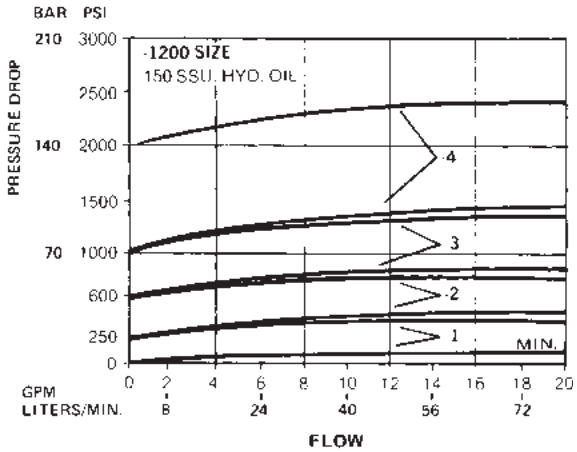

OVERRIDE CURVES
MODEL RA1200S

E

Dimensions

Millimeter equivalents for inch dimensions are shown in (**)

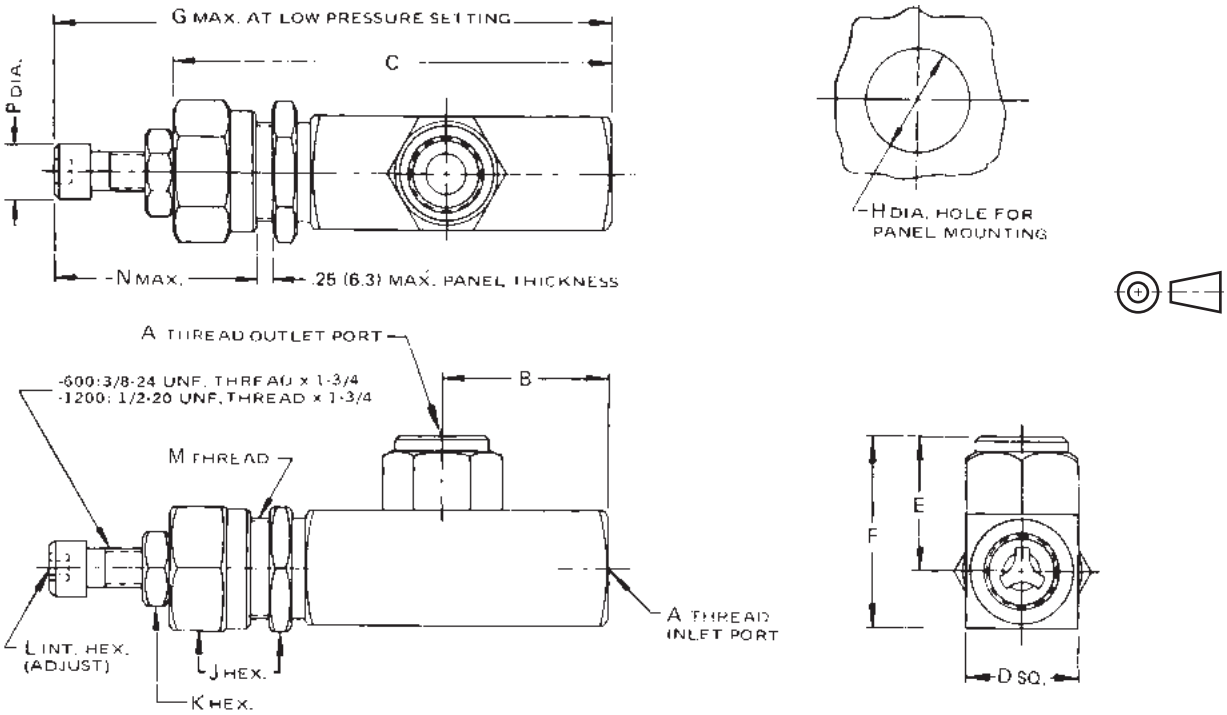

VALVE MODEL	A THREAD NPFT	B	C	D	E	F	G	H	J	K	L	M THREAD	N		WEIGHT Lb. (Kg.)
RA600S	3/8-18	1.67 (42 4)	4.25 (108)	1.00 (25.4)	1.25 (32)	1.75 (44.4)	5.62 (142.7)	.906 (23)	1.125 (28.5)	.562 (14.2)	.312 (8)	7/8-14 UNF THREAD	2.12 (53.8)	.56 (14.2)	1.2 (0 5)
RA1200S	3/4-14	2.22 (56.3)	5.91 (150.1)	1.50 (38.1)	1 75 (44.4)	2.50 (63.5)	7.25 (184.1)	1.344 (34.1)	1.625 (41 2)	.75 (19)	.375 (9.5)	1-5/16-12 UNF THREAD	2.44 (61.9)	.75 (19)	3.2 (1.5)

3000-E1.p65, dd

Parker Hannifin Corporation
Hydraulic Valve Division
Elyria, Ohio, USA

Millimeter equivalents for inch dimensions are shown in (**)

RAS600S

Subplate mounted, direct operated Relief Valve

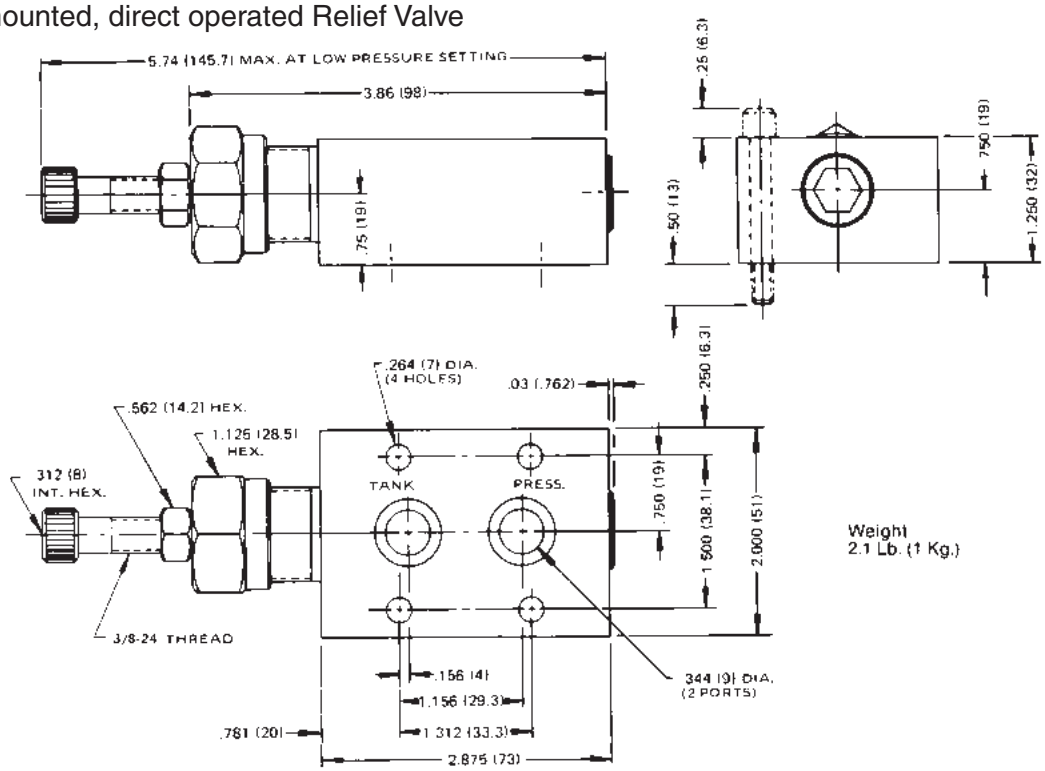

Weight
2.1 Lb. (1 Kg.)

Subplate Dimensions

Reference Data Only
(Subplates are not available)

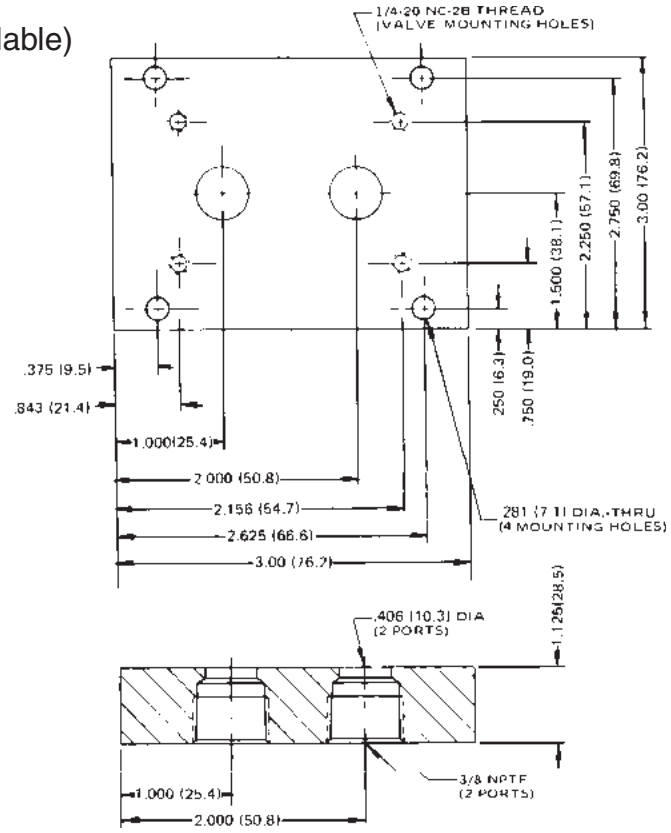

3000-E1.p65, dd

Parker Hannifin Corporation
Hydraulic Valve Division
Elyria, Ohio, USA

General Description

Series RCP in-line pressure control valves are chiefly used as remote control valves. They limit system pressure by opening to tank when pressure reaches the selected relief pressure.

When used as remote control valves, Series RCP valves are piped to the vent port of a pilot operated relief valve, such as Series RP and RM valves.

Pressure relief settings are made with a self-locking knob that is pulled and turned to the proper setting. Pushing the knob in locks it positively at this setting.

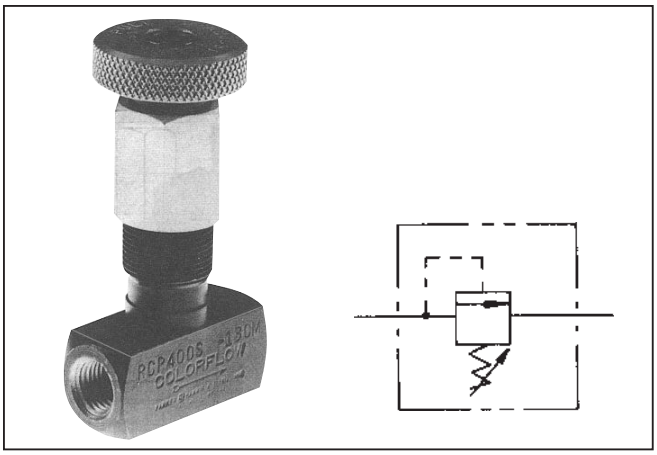

Specifications

Pressure Adjustment Ranges	3 - 70 Bar (50 - 100 PSI) 10 - 140 Bar (150 - 2000 PSI) 10 - 210 Bar (150 - 3000 PSI)
Maximum Operating Pressure	210 Bar (3000 PSI)
Flow	4 LPM (1 GPM) Maximum 492 cc./min.(30 Cu. In/min.) Minimum
Pressure Setting	3.4 Bar (50 PSI) Minimum, at maximum flow Changes in flow, viscosity or temperature will affect minimum pressure
Size	1/4"
Port	NPTF
Mounting	Any position, panel mounting kit available

E

Ordering Information

Example: "RCP400SF" means Series RCP, 1/4", steel, 150—2000 PSI pressure adjustment range, standard nitrile seal.

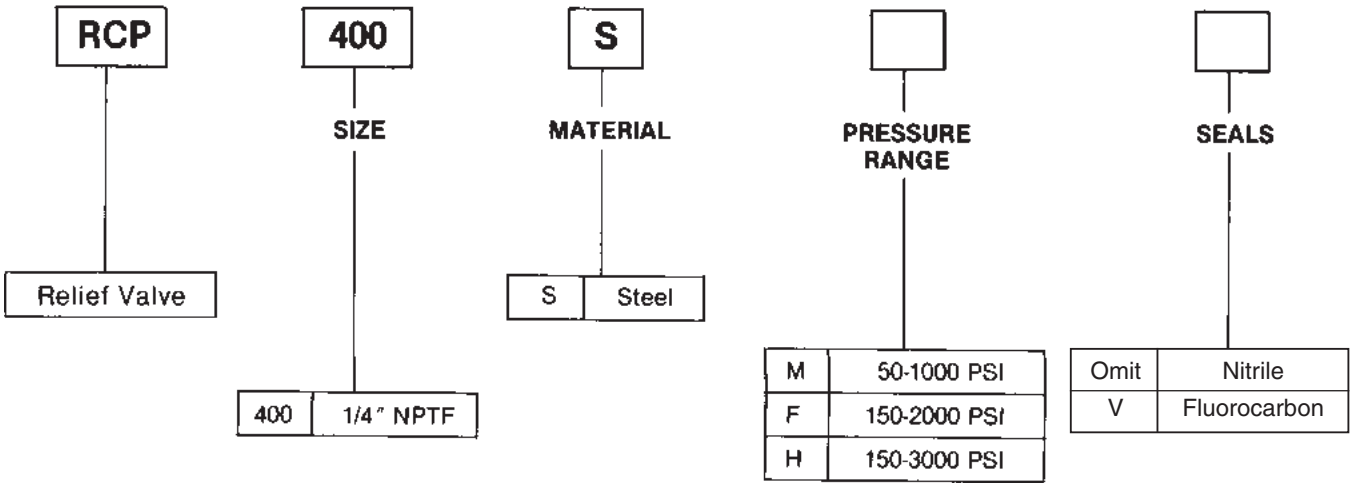

Millimeter equivalents for inch dimensions are shown in (**)

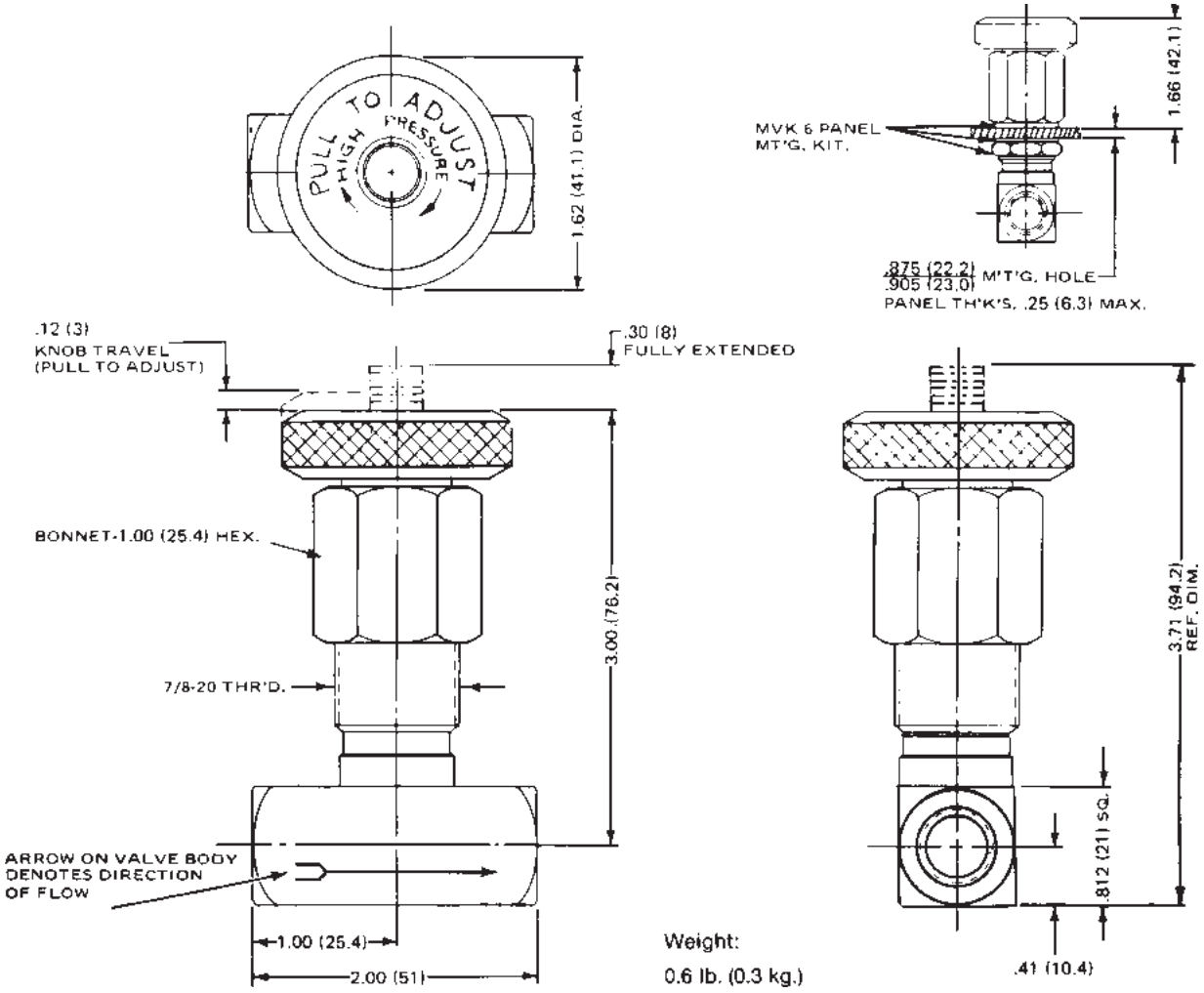

General Description

Series RP pressure control valves open the system to tank when the system pressure reaches the pressure setting of the control valve (see pressure adjustment ranges, below).

By adding a remote pilot valve to the vent port of a main pilot relief valve, pressure can be controlled by remote control. With this arrangement, the main relief valve setting should be 10 Bar (150 PSI) higher than the remote pilot setting.

For venting flow at minimum pressure, the vent port of the main relief valve can be connected directly to the tank.

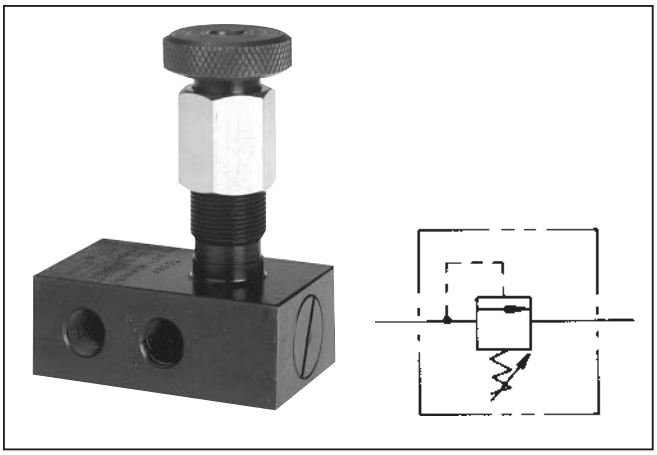

Specifications

Pressure Adjustment Ranges	3 - 70 Bar (50 - 100 PSI) 10 - 140 Bar (150 - 2000 PSI) 10 - 210 Bar (150 - 3000 PSI)
Maximum Operating Pressure	210 Bar (3000 PSI)
Override	Any relief valve is subject to override, or a change in relief pressure when a change in flow occurs. For override characteristics, see chart on next page.

Flow Data

Valve Model	Port Size	Flow, max. GPM (L/M)	Vent Pressure PSI (Bar)
RP400	1/4 NPTF	6 (25)	60 (4)
RP600	3/8 NPTF	10 (40)	80 (5)
RP800	1/2 NPTF	15 (60)	50 (3)

Ordering Information

Example: “RP400SFV” means Series RP relief valve, 1/4” size, steel, 150-2000 PSI pressure range, optional Fluorocarbon seal.

RP — RELIEF VALVE

S — MATERIAL

S	Steel

SIZE

400	1/4” NPTF
600	3/8” NPTF
800	1/2” NPTF

PRESSURE RANGE

M	50-1000 PSI
F	150-2000 PSI
H	150-3000 PSI

SEAL

Omit	Nitrile
V	Fluorocarbon

E

3000-E1.p65, dd

Parker Hannifin Corporation
Hydraulic Valve Division
Elyria, Ohio, USA

Override Specifications

All relief valves are subject to override. For a given valve setting and flow, any changes in flow will cause a change in relief pressure. For example, a valve set at 140 Bar (2000 PSI) at 25% flow will read 145 Bar (2100 PSI) at 100% flow.

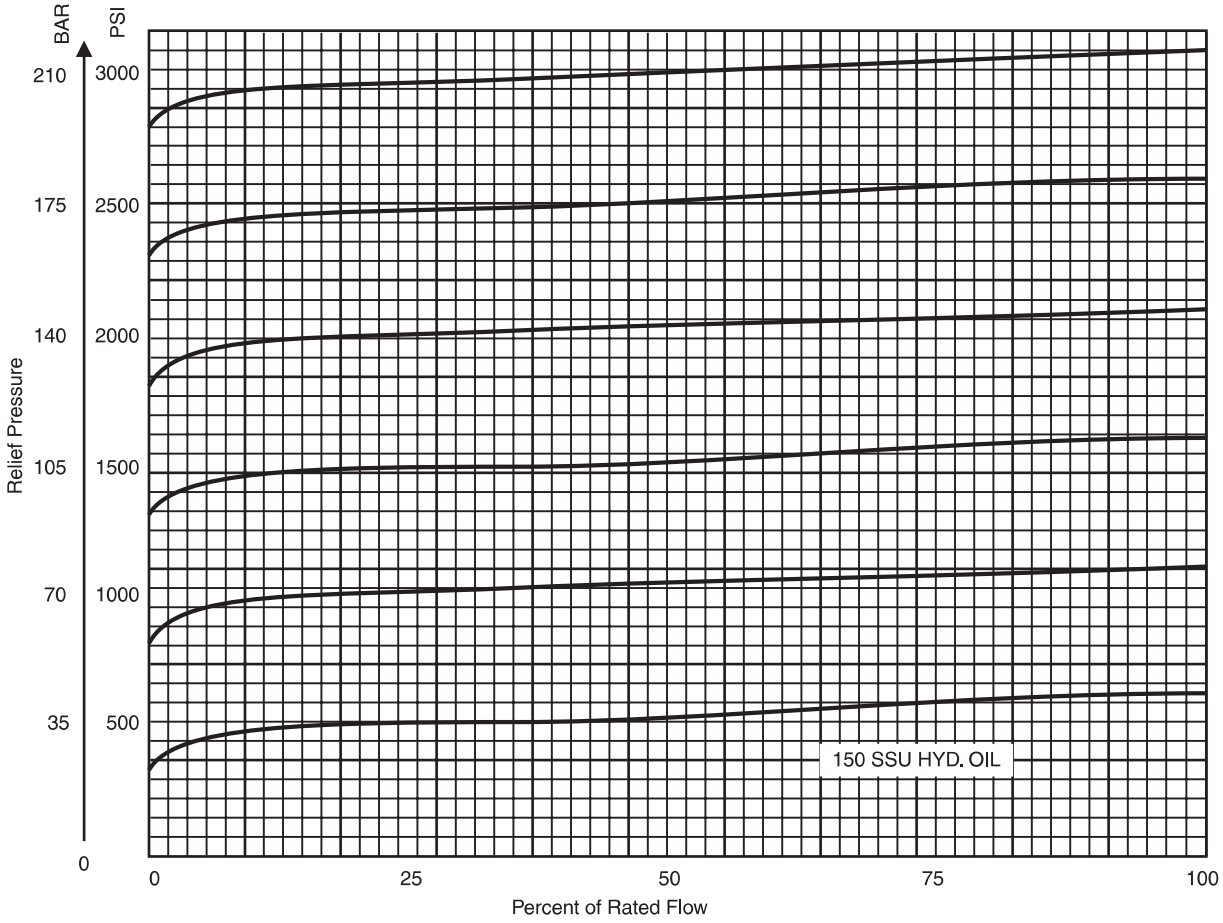

Relief Pressure vs. Flow

Millimeter equivalents for inch dimensions are shown in (**)

In-line mounted, pilot operated Pressure Relief Valves

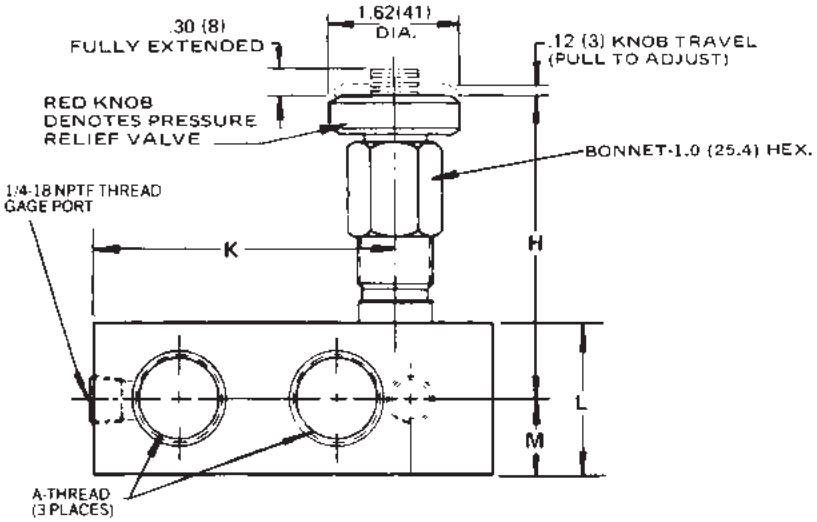

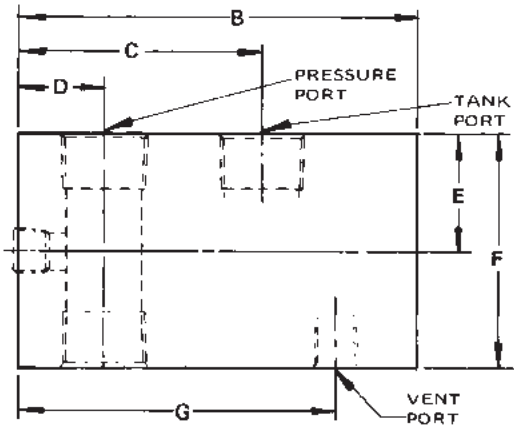

Valve Size	A-Thread	B	C	D	E	F	G	H	J	K	L	M	Weight Lb. (Kg)
RP400S	1/4-18 NPTF	3.00 (76.2)	1.60 (41)	.67 (17)	.88 (22.3)	1.75 (44.4)	2.25 (57.1)	3.16 (80.2)	4.02 (102.1)	2.04 (52)	1.12 (28.4)	.56 (14.2)	1.9 (0.8)
RP600S	3/8-18 NPTF	3.53 (90)	2.00 (51)	.75 (19)	1.00 (25.4)	2.00 (51)	2.77 (70.3)	3.22 (82)	4.14 (105.1)	2.62 (66.5)	1.25 (32)	.62 (16)	2.6 (1.2)
RP800S	1/2-14 NPTF	4.10 (104.1)	2.40 (61)	.91 (23.1)	1.12 (28.4)	2.25 (57.1)	3.17 (81)	3.34 (85)	4.39 (115)	3.03 (77)	1.50 (38.1)	.75 (19)	3.7 (1.7)

General Description

Series R6701 relief valves are pilot operated relief valves. When system pressure reaches the selected adjustable setting on this valve, the valve opens the system to tank.

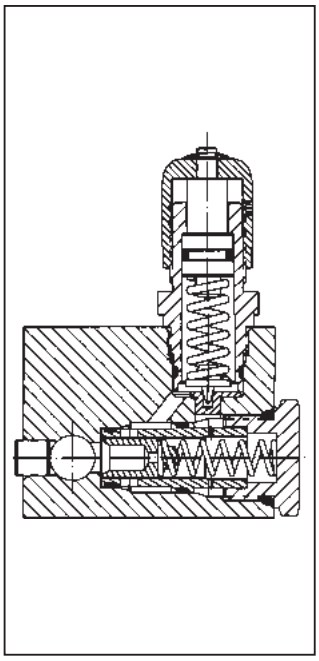

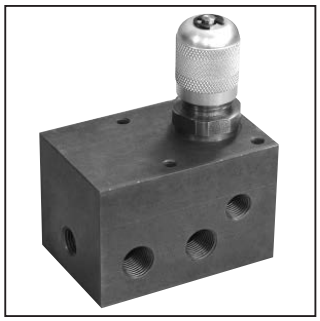

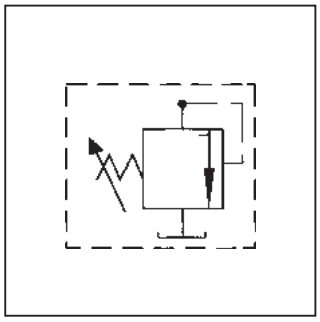

Features

- Accurate, quick response due to pressure balanced spool design.
- Available in 1/4" through 3/4" sizes.
- Can be equipped with Tel-lok cap for tamper-proof design (1/4" - 3/4" sizes only).
- High volume pilot operated relief 340.7 LPM (90 GPM) 1 1/4" and 1 1/2" poppet design available.

Specifications

Service Applications	Hydraulic Oil
Pressure Adjustment Ranges	Range 1: Sizes 1/4" - 3/4" 13.8 - 82.8 Bar (200 - 1200 PSI) Sizes 1 1/4" - 1 1/2" 17.3 - 82.8 Bar (200 - 1200 PSI) Range 2: Sizes 1/4" - 3/4" 69 - 207 Bar (1000 - 3000 PSI) Sizes 1 1/4" - 1 1/2" 69 - 207 Bar (1000 - 3000 PSI) Range 3: Sizes 1/4" - 3/4" 207 - 414 Bar (3000 - 6000 PSI) Sizes 1 1/4" - 1 1/2" 207 - 414 Bar (3000 - 6000 PSI)
Sizes	NPT 1/4", 1/2", 3/4"
Ports	NPT Pipe threads
Mounting	In-line or panel
Material	Body, Cap, Piston Sleeve, Pilot Cap: Barstock steel Pilot Knob: Aluminum Piston, Adjustable Stem, Pilot Piston, Pilot Seat: 400 Stainless Steel O-rings: Synthetic rubber Back-up Rings: PTFE Body Finish: Paint
Operating Temperature	-40°C to +121°C (-40°F to +250°F)

Flow Data

Valve Size	Cv Factor Inlet to Inlet	Flow Rate GPM Max.	Vent Pressure at Max. Flow	Weight
1/4	1.5	6	65 PSI	4 Lbs. 12 Oz.
1/2	9.0	15	30 PSI	7 Lbs.
3/4	12.5	25	50 PSI	9 Lbs. 10 Oz.

E

3000-E1.p65, dd

Parker Hannifin Corporation
Hydraulic Valve Division
Elyria, Ohio, USA

Ordering Information

X	R	670	1	-1	-1/4	S	2
Option	Type Valve	Catalog Number	Port Position	Pressure Range	Size	Materials	O-Ring Code
X External Drain	R Relief	670 Tel-Trol Pilot-Operated Relief Valve	1 Inline	1 (Sizes $\frac{1}{4}$ – $\frac{3}{4}$) 200 to 1200 PSI 2 (Sizes $\frac{1}{4}$ – $\frac{3}{4}$) 1000 to 3000 PSI 3 (Sizes $\frac{1}{4}$ – $\frac{3}{4}$) 3000 to 6000 PSI	1/4 NPT 1/2 NPT 3/4 NPT	S Steel	2 Nitrile Others Available

Dimensions — Shown in inches

E

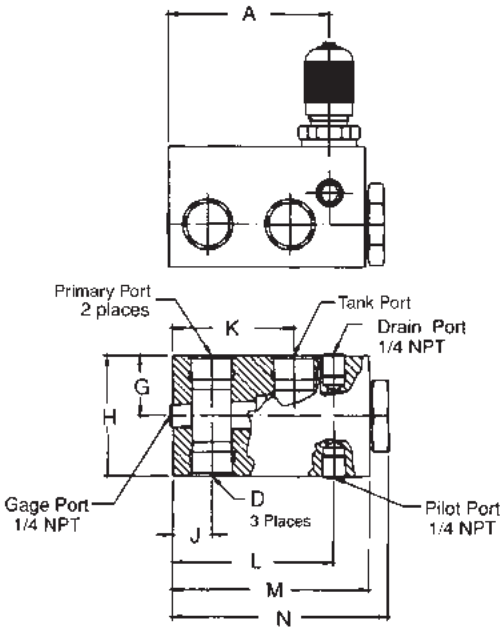

R6701 Sizes 1/4 – 3/4

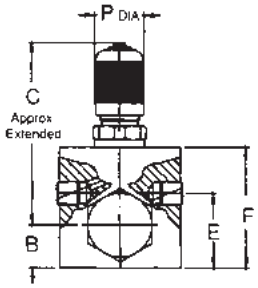

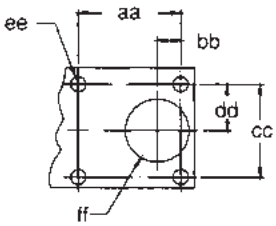

Panel Machining for Panel Mounted Valves

Panel Mounting Dimensions

Valve Size	aa	bb	cc	dd	ee	ff	Mounting Threads
$\frac{1}{4}$	1.750	0.531	1.750	0.875	0.281	1.4375	$\frac{1}{4}$ - 20NC-2
$\frac{1}{2}$							
$\frac{3}{4}$	2.312	0.531	2.125	1.062	0.343	1.4375	$\frac{5}{16}$ -18NC-2

Valve Size	A	B	C	Port Type D	E	F	G	H	J	K	L	M	N	P
$\frac{1}{4}$	2.313	.750	4.000	$\frac{1}{4}$ NPT	1.313	2.375	1.187	2.375	.625	1.563	2.313	3.125	3.437	1.125
$\frac{1}{2}$	3.188	.968	4.156	$\frac{1}{2}$ NPT	1.688	2.750	1.125	2.250	.750	2.250	3.188	4.000	4.437	1.125
$\frac{3}{4}$	3.688	.968	4.156	$\frac{3}{4}$ NPT	1.688	2.750	1.375	2.750	.891	2.781	3.688	4.500	4.937	1.125

General Description

Series PR*S pressure reducing valves maintain an independently controlled constant outlet pressure on one leg of the hydraulic system, regardless of pressure at the valve inlet or on the main relief valve. Inlet pressure on a Series PR valve must be higher than the pressure setting on the valve.

Made from alloy steel bar stock, Series PR valves are compact and require minium space. They can be installed in any position. They are used on installations that do not require service of equal reliability.

The one-hand adjusting knob is self-locking at desired pressure. Pull the knob and turn to adjust; release knob to lock positively.

Drain lines of Series PR valves should be connected directly to tank below fluid level. Pressure in any drain line is in addition to the valve pressure chosen.

For certain unusual installations, the drain line can be pressurized or restricted to improve valve pressure reducing performance. For example, if full pressure is applied to the drain, the Series PR valve will open, preventing pressure reduction. Pressurizing or retricting the drain will avoid this. However, be careful in using Series PR valves in other than normal applications; consult your Parker representative or the Factory.

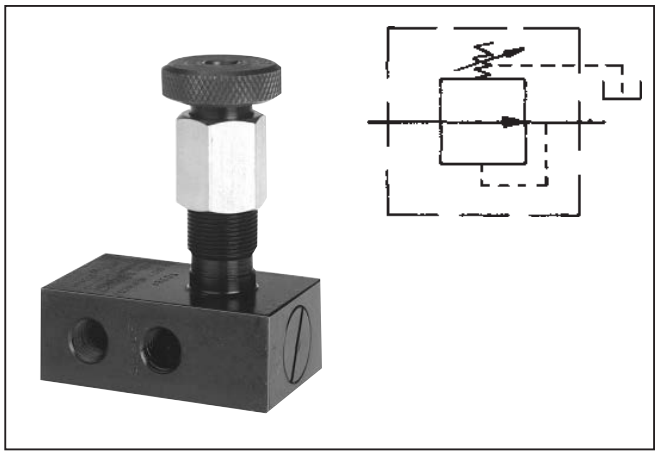

Specifications

Pressure Adjustment Ranges	3.5 - 70 Bar (50 - 1000 PSI) 10.5 - 140 Bar (500 - 2000 PSI) 10.5 - 210 Bar (150 - 3000 PSI)
Maximum Operating Pressure	210 Bar (3000 PSI)
Pressure Setting	3.5 Bar (50 PSI) minimum, at rated flow Note: Changes in flow, viscosity or temperature will affect valve minimum pressure.

Flow Data

Valve Model	Port Size	Flow (Max)
PR400S	1/4 NPTF	6 GPM (25 L/M)
PR600S	3/8 NPTF	10 GPM (40 L/M)
PR800S	1/2 NPTF	15 GPM (60 L/M)

Ordering Information

Example: “PR400SVF” means Series PR relief valve, 1/4” size, steel, 150-2000 PSI pressure range, optional Fluorocarbon seal.

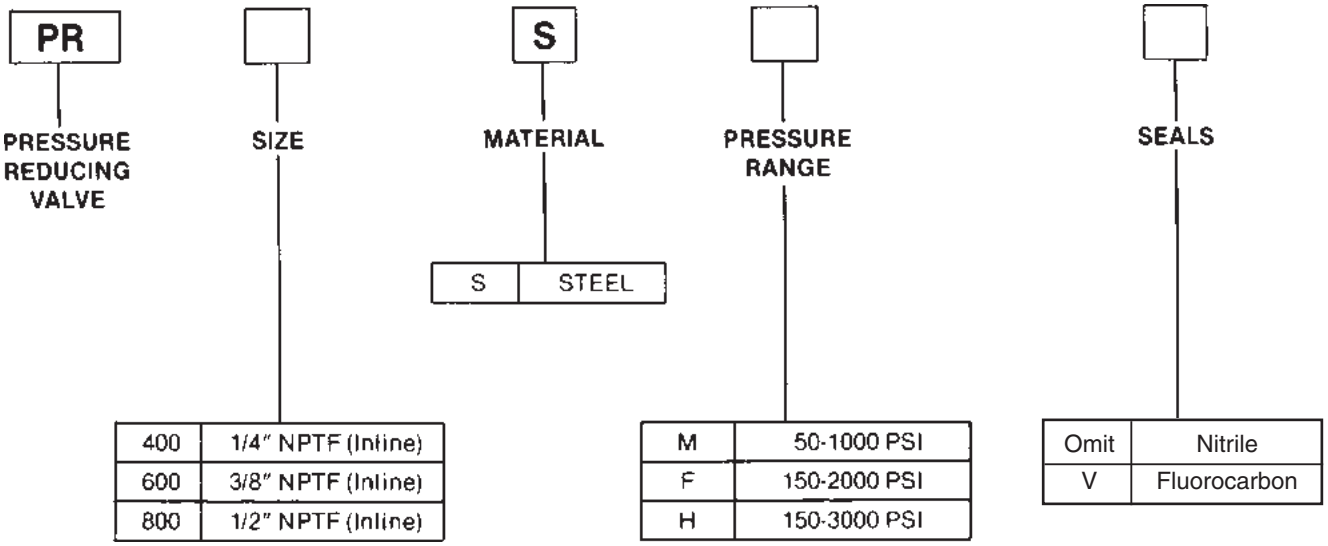

Millimeter equivalents for inch dimensions are shown in (**)

In-line mounted, pilot operated Pressure Reducing Valves

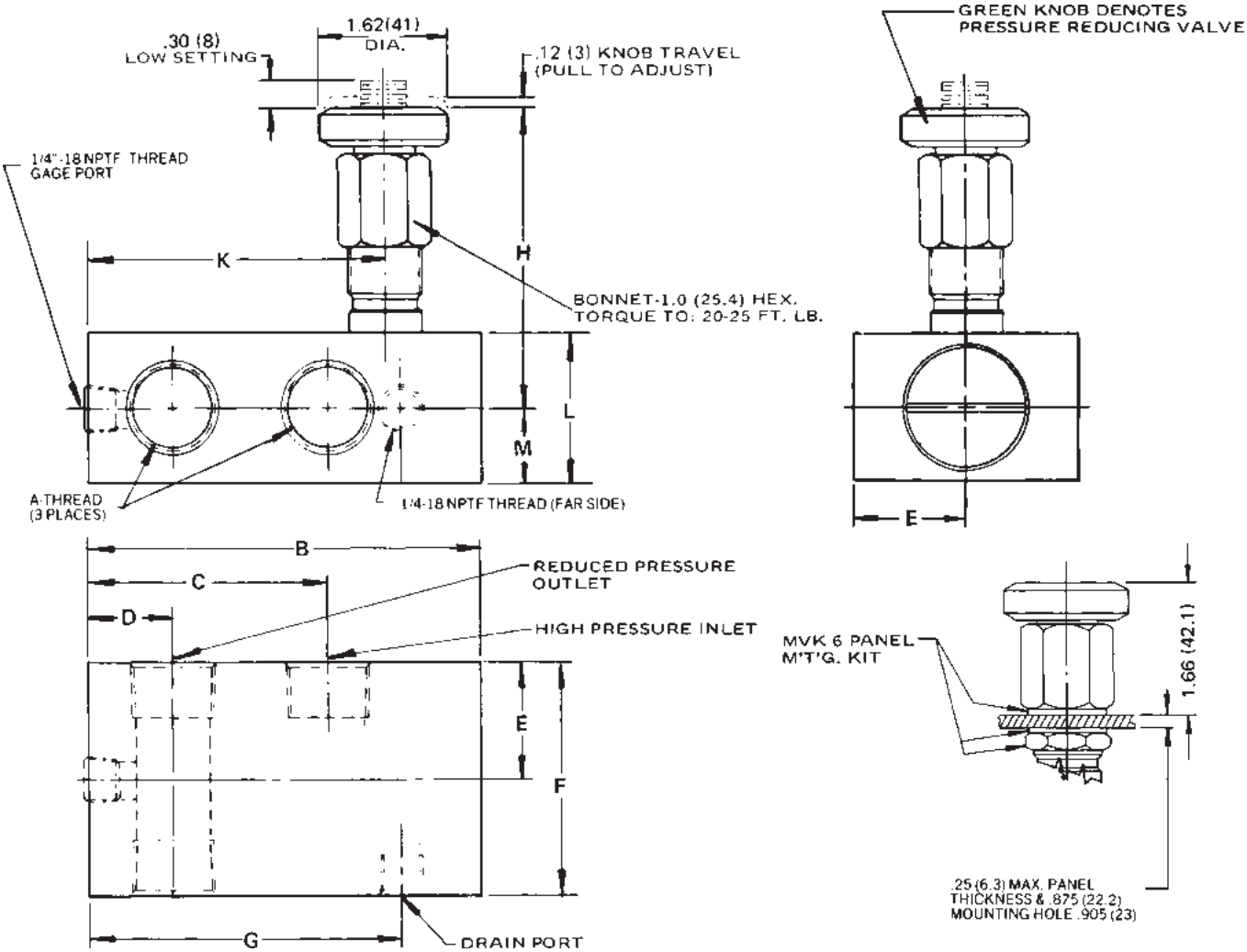

Valve Model	A-Thread	B	C	D	E	F	G	H	K	L	M	Weight Lb. (Kg.)
PR400S	1/4-18 NPTF	3.00 (76.2)	1.60 (41)	.67 (17)	.88 (22.3)	1.75 (44.4)	2.25 (57.1)	3.16 (80.2)	2.04 (52)	1.12 (28.4)	.56 (14.2)	1.9 (0.9)
PR600S	3/8-18 NPTF	3.53 (90)	2.00 (51)	.75 (19)	1.00 (25.4)	2.00 (51)	2.77 (70.3)	3.22 (82)	2.62 (66.5)	1.25 (32)	.62 (16)	2.6 (1.2)
PR800S	1/2-14 NPTF	4.10 (104.1)	2.40 (61)	.91 (23.1)	1.12 (28.4)	2.25 (57.1)	3.17 (81)	3.34 (85)	3.03 (77)	1.50 (38.1)	.75 (19)	3.7 (1.7)

General Description

Series PR6701 pressure reducing pressure control valves maintain an independently controlled constant outlet pressure on one leg of the hydraulic system, regardless of pressure at the valve inlet or on the main relief valve. Inlet pressure on the valve must be higher than the pressure setting on the valve.

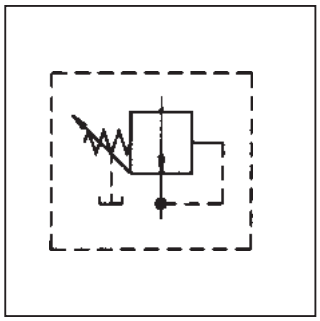

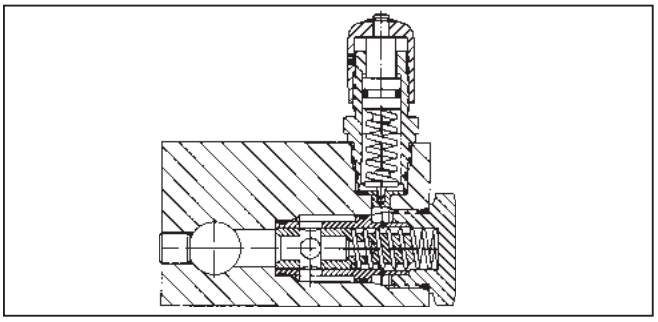

Features

- Recommended where limited reduced hydraulic pressure is required without using additional low pressure pump.
- Designed for up to 414 Bar (6000 PSI) primary pressure.
- Maintains regulated pressure within ±5% under flow conditions.

Specifications

Service App.	Hydraulic Oil
Pressure Adjustment Range	Range 1: Maximum Primary Pressure 138 Bar (2000 PSI) Regulated Secondary Pressure 13.8 - 82.8 Bar (200 - 1200 PSI) Range 2: Maximum Primary Pressure 207 Bar (3000 PSI) Regulated Secondary Pressure 69 - 207 Bar (1000 - 3000 PSI) Range 3: Maximum Primary Pressure 414 Bar (6000 PSI) Regulated Secondary Pressure 207 - 414 Bar (3000 - 6000 PSI)
Maximum Operating Pressure	Proof: Ranges 1 & 2 310.5 Bar (4500 PSI) Range 3 621 Bar (9000 PSI) Burst: Ranges 1 & 2 517.5 Bar (7500 PSI) Range 3 1035 Bar (15,000 PSI)

Sizes	NPT 1/4", 1/2", 3/4"
Ports	NPT Pipe threads
Mounting	In-line or panel
Material	Body, Cap, Piston Sleeve, Pilot Cap: Steel Pilot Knob: Aluminum Piston, Adjustable Stem, Pilot Piston, Piot Seat: 400 Stainless Steel O-rings: Synthetic rubber Back-up Rings: PTFE Body Finish: Paint
Operating Temperature	-40°C to +121°C (-40°F to +250°F)

Flow Data

Valve Size	C_V Factor Inlet to Inlet	Flow, Max. LPM (GPM)	Max. Pilot Flow to Tank	Weight kg (lbs.)
1/4	1.1	22.7 (6)	0.7 LPM (.18 GPM)	2.2 (4.75)
1/2	3.5	56.8 (15)	0.8 LPM (.21 GPM)	3.2 (7.0)
3/4	4.5	94.6 (25)	0.8 LPM (.22 GPM)	4.4 (9.6)

Ordering Information

PR	670	1	-1	-1/4	S	2
Type Valve	Catalog Number	Type Ports	Secondary Pressure Range	Size	Materials	O-Ring Code
PR Pressure-Reducing Valve	Tel-Trol Pilot Operated Valve	1 Inline	1 200 to 1200 PSI 2 1000 to 3000 PSI 3 3000 to 6000 PSI	1/4 NPT 1/2 NPT 3/4 NPT	S Steel	2 Nitrile Others Available

Dimensions — Shown in inches

E

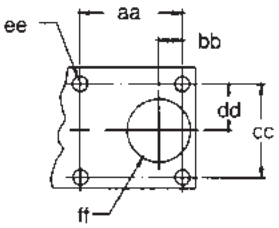

Panel Machining for Panel Mounted Valves

Panel Mounting Dimensions

Valve Size	aa	bb	cc	dd	ee	ff	Mounting Threads
1/4	1.750	0.531	1.750	0.875	0.281	1.4375	1/4 - 20NC-2
1/2							
3/4	2.312	0.531	2.125	1.062	0.343	1.4375	5/16 -18NC-2

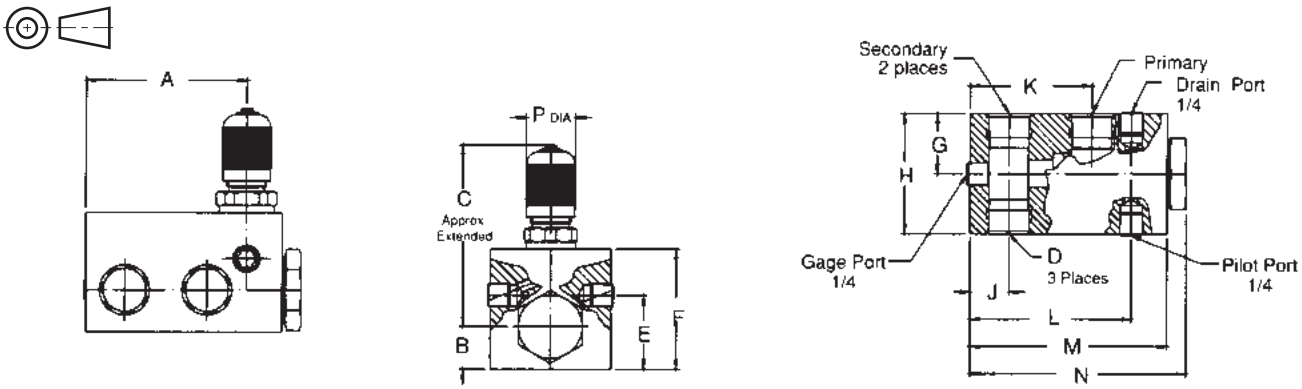

Valve Size	A	B	C	Port Type D	E	F	G	H	J	K	L	M	N	P
1/4	2.313	.750	4.000	1/4 NPT	1.313	2.375	1.187	2.375	.625	1.563	2.313	3.125	3.437	1.125
1/2	3.188	.968	4.156	1/2 NPT	1.688	2.750	1.125	2.250	.750	2.250	3.188	4.000	4.437	1.125
3/4	3.688	.968	4.156	3/4 NPT	1.688	2.750	1.375	2.750	.891	2.781	3.688	4.500	4.937	1.125

3000-E1.p65, dd

Parker Hannifin Corporation
Hydraulic Valve Division
Elyria, Ohio, USA

General Description

Series P6701 valves serve as a remote pilot for a pilot operated parent valve. Adjustable in three pressure ranges: 6.9 to 82.8 Bar (100 to 1200 PSI), 69 to 207 Bar (1000 to 3000 PSI) and 207 to 345 Bar (3000 to 6000 PSI).

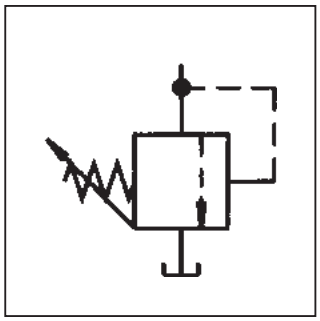

Features

- Remote pilot for R6701, R6703, S6701, S6703, PR6701 and PR6703.
- Ideal for adjustable vent valve.

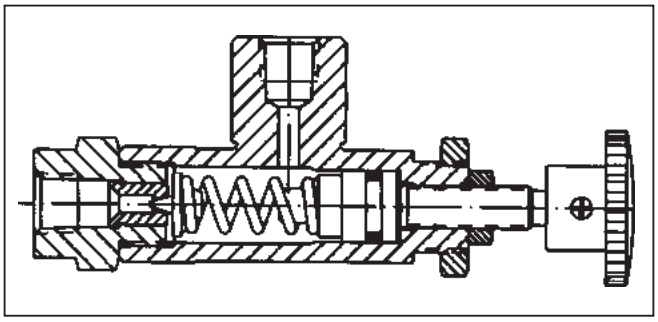

Specifications

Service App.	Hydraulic Oil	**Internal Leakage**	Less than 1 DPM at 90% of cracking pressure
Pressure Adjustment Range	Range 1: 6.9 - 82.8 Bar (100 - 1200 PSI Range 2: 69 - 207 Bar (1000 - 3000 PSI) Range 3: 207 - 414 Bar (3000 - 6000 PSI)	**Mounting**	Panel hole 27/32" diameter
Maximum Operating Pressure	Proof: 517.5 Bar (7500 PSI) Burst: 828 Bar (12,000 PSI)	**Material**	Body: Forged aluminum alloy Trim: Steel and Stainless steel O-rings: Synthetic rubber
Sizes	NPT 1/4"	**Operating Temperature**	-40°C to +121°C (-40°F to +250°F)
Orifice Dia.	1/8"		
Ports	NPT Pipe threads		

Ordering Information

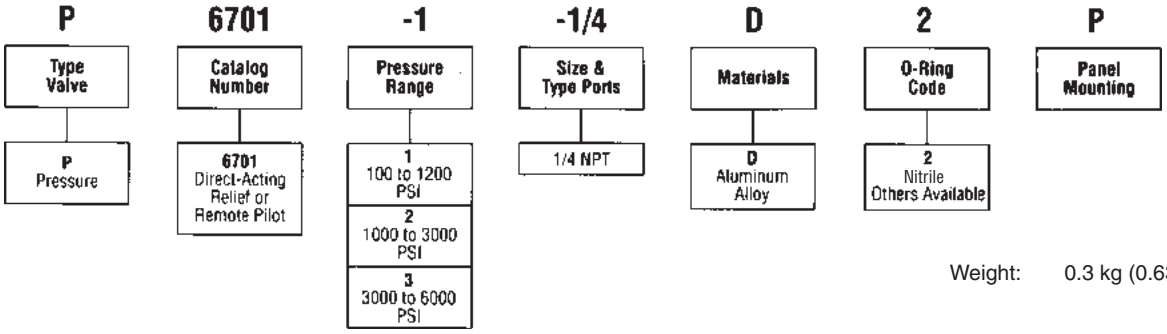

Weight: 0.3 kg (0.63 lbs.)

Performance Curves

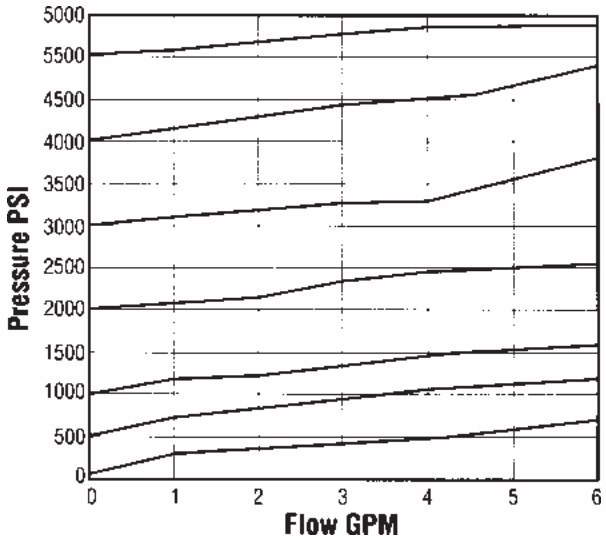

E

Dimensions — Shown in inches

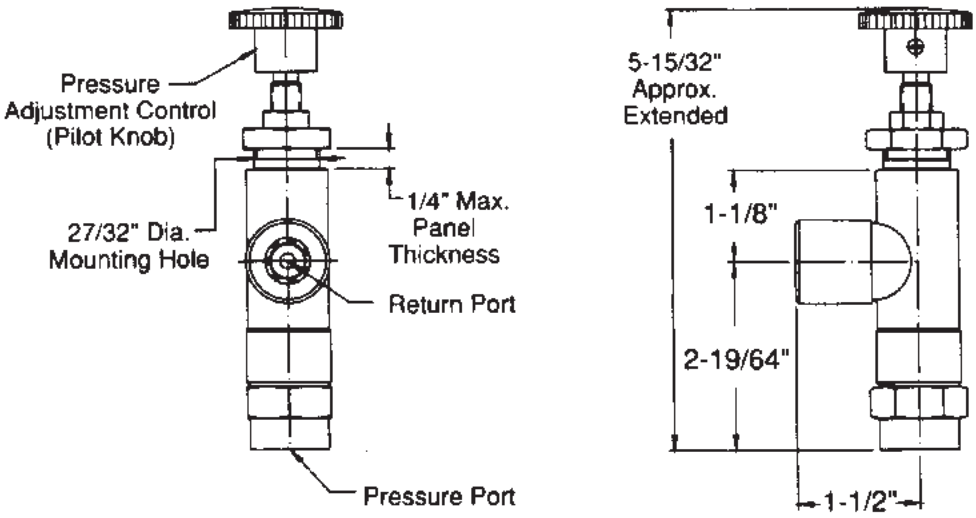

Return to ALPHA TOC
Return to SECTION TOC

In-Line Mounted Plug Valves

General Description

Series 300 and 700 are 2, 3, and 4-way plug valves which can handle a variety of media. Series 300 contains a self-lubricating PTFE plug. Series 700 features a metal plug which requires lubrication. The different valve configurations allow for shut off or the selection of a particular flow pattern.

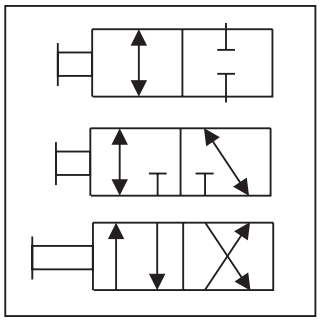

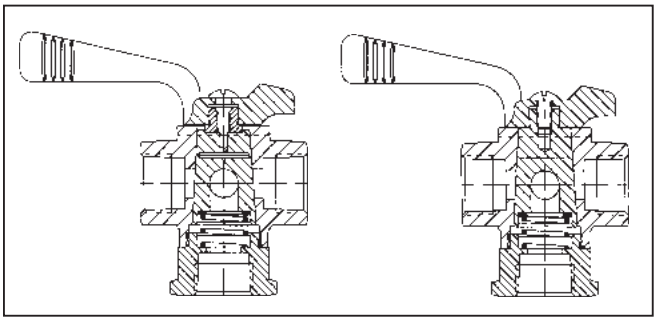

Features

- PTFE plug design requires no lubrication and is ideal for sampling applications.
- Wide selection of flow patterns available.
- Metal plug available with a wide range of lubricants for most applications.

Specifications

Service App.	Liquid and air
Pressure Range	Liquid: 6.2 Bar (90 PSI) Air: 3.5 Bar (50 PSI)
Internal Leakage	Liquid: Zero Air: 1 bubble in 4 seconds at 3.5 Bar (50 PSI)
Sizes	See chart
Ports	NPT Pipe threads FLD Flared Tube Connection SAE 37°
Mounting	Flanged
Material	Series 300: Body: Brass, aluminum alloy, stainless steel Plug: Stainless steel impregnated PTFE Spring: Stainless steel Handle: Die cast aluminum alloy Series 700: Body: Brass with brass plug; aluminum alloy with stainless steel plug; stainless steel with stainless steel plug Spring: Stainless Steel Handle: Die cast aluminum
Temperature Range	Series 300: Non-operating: -40°C to +121°C (-40°F to +250°F) Operating: -18°C to 71°C (0°F to +160°F) Series 700: 0°C to +71°C (32°F to +160°F)

CV Factor

Size and Dash No.		1/8 4	1/4 6	3/8 8	1/2 10	3/4 12
Max. Weight Lbs.	Alum. Alloy	.13	.25	.50	.62	.75
	Brass	.25	.43	1.00	1.50	1.75
	Stainless Steel	.37	.75	1.25	1.62	1.87
CV Factor	Inline	1.00	2.00	5.00	9.00	16.00
	Angle	.60	1.00	2.70	5.00	8.60

NOTE:
Each plug and body assembly is individually ground and lapped for perfect fit. Plugs and bodies are not replaceable or interchangeable in the field. Most plug valves, other than 2-way, have port interflow when turning handle. If interflow is a problem, consult our technical department.

F

Ordering Information

310-3

Catalog Number	Type	Number of Ports	Type Porting A	Type Porting B	Type Porting C	Sizes and Materials	Handle Turns	Flow Patterns
310-3	Flanged Inline	3	NPT	–	–	1/4B	90°	
or 710-3	Flanged Inline	3	NPT	–	–	1/4B, 1/8D	90°	
310-6	Flanged Inline	4	NPT	–	–	1/4B	90°	
or 710-6	Flanged Inline	4	NPT	–	–	1/2B, 1/4B, 3/4B	90°	
311-421 or 711-421	Flanged Inline Plus Bottom Port	4 + Bottom	NPT	–	NPT	1/4B	360°	
313-23	Flanged Inline Plus Bottom Port	2 + Bottom	NPT	–	NPT	3/4B	90°	
320HTX	Flanged Inline	2	FLD	FLD	–	8SS	90°	

-1/4

Size
See Available Sizes from Chart

B

Materials
B Brass
D Aluminum Alloy
SS Stainless Steel

Dimensions

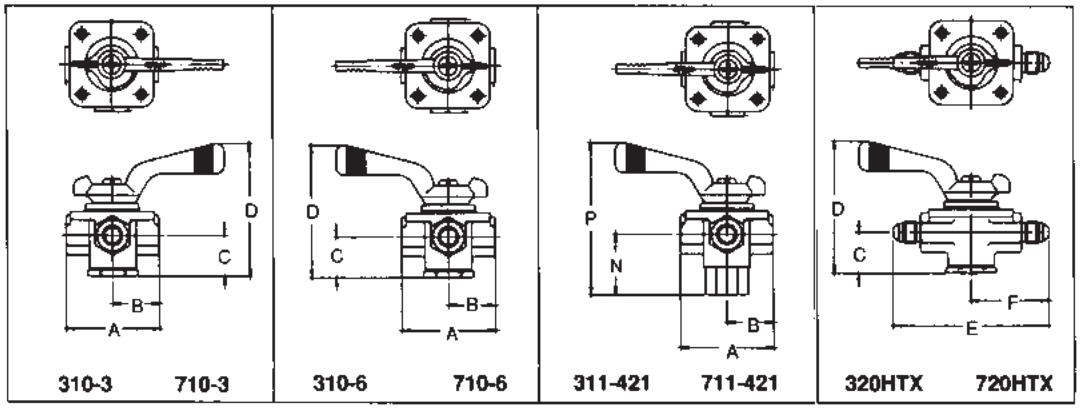

All Dimensions are in Inches															
Tube Size	Pipe Size	A	B	C	D	E	F	G	H	J	K	L	M	N	P
4	1/8"	1-7/16	23/32	47/64	2-9/32	2-5/8	1-5/16	1-13/16	.884	.687	6-32	3/16	11/32	1-1/16	2-39/64
6	1/4"	1-7/8	15/16	13/16	2-41/64	3-1/8	1-9/16	2-1/4	1.193	.937	10-32	3/16	7/16	1-13/64	3-1/32
8	3/8"	2-1/4	1-1/8	1-3/64	3-3/16	3-5/8	1-13/16	2-11/16	1.458	1.187	10-32	9/32	9/16	1-15/32	3-39/64
10	1/2"	2-1/2	1-1/4	1-9/64	3-15/32	4-1/4	2-1/8	3-1/8	1.724	1.406	1/4-28	1/4	5/8	1-23/32	4-3/64
12	3/4"	2-15/16	1-15/32	1-21/64	3-31/32	4-9/16	2-9/32	3-9/16	1.856	1.625	1/4-28	1/4	3/4	1-31/32	4-39/64

Service Note: Valves taken from stock, or valves not used for some time, may be hard to turn. This condition is due to drying out of the lubricant. The plug may be loosened by squeezing the valve carefully in a vise, pressing against the center screw in the handle. Turning the handle several times will free-up the plug. If necessary, disassemble the valve, wash off all the old lubricant, and re-lubricate the valve using only a small quantity of the proper lubricant.

CAUTION – DO NOT USE ANY OF THE ABOVE IN LIQUID OXYGEN SYSTEMS.

3000-F1.p65, dd

Parker Hannifin Corporation
Hydraulic Valve Division
Elyria, Ohio, USA

General Description

Series 744 4-way plug valves can handle a variety of media. The valve design requires low actuation torque and has a very low pressure drop. Series 744 contains a self-lubricating PTFE plug. The valve construction is compact and shifting the flow direction of the valve will not deadhead the pump.

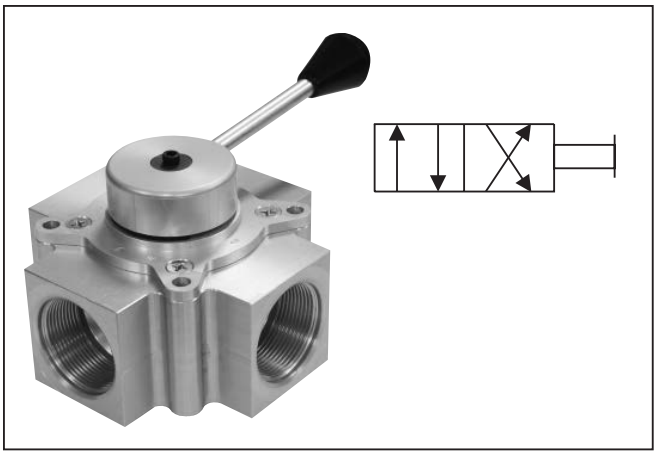

Features

- Features high flow with low pressure drop.
- Compact construction.
- 17.3 Bar (250 PSI) service.
- No lubricaton neccessary.
- Low turning torque.

Specifications

Service Applications	Hydraulic or pneumatic; available for other service on special order
Pressure Range	Liquid: 17.3 Bar (250 PSI) Air: 20 in hg. vacuum to 17.3 Bar (250 PSI) Proof: 20.7 Bar (300 PSI)
Internal Leakage	Liquid: 2 DPM maximum Air: 14 bubbles per minute
Sizes	NPT 1 1/4", 1 1/2" IST 20, 24
Ports	NPT Pipe threads IST Internal straight threads
CV Factor	1 1/4, 20 = 30 1 1/2, 24 = 32
Mounting	Panel hole diameter 2 9/16"; maximum thickness 1/2"; four 1/4-20UNC-3B tapped holes; top cover plate drilled for bolt clearance
Material	Body: Aluminum alloy Bearings: Delrin Port Seals: PTFE O-rings: Synthetic rubber
Temperature Range	-40°C to +107°C (-40°F to +225°F) Higher temperatures on special order

Dimensions

Inch equivalents for millimeter dimensions are shown in (**)

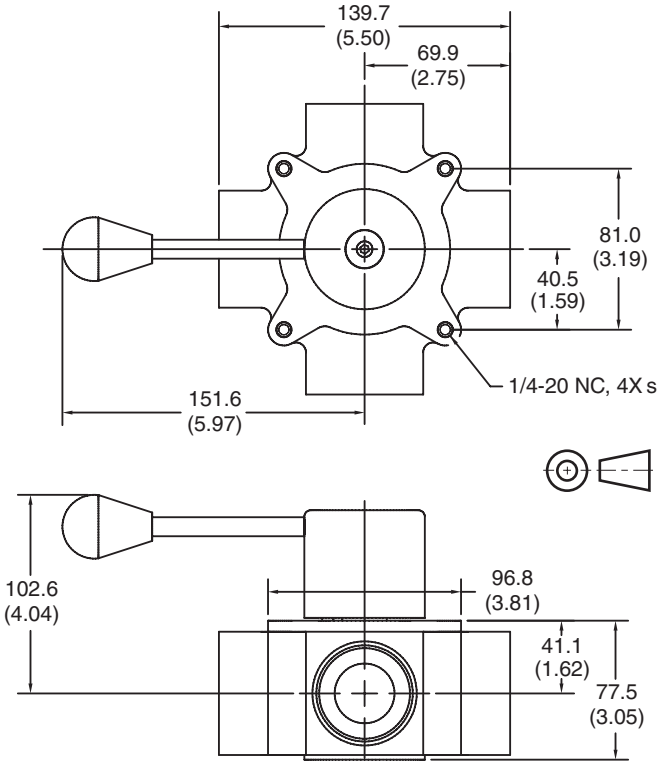

Ordering Information

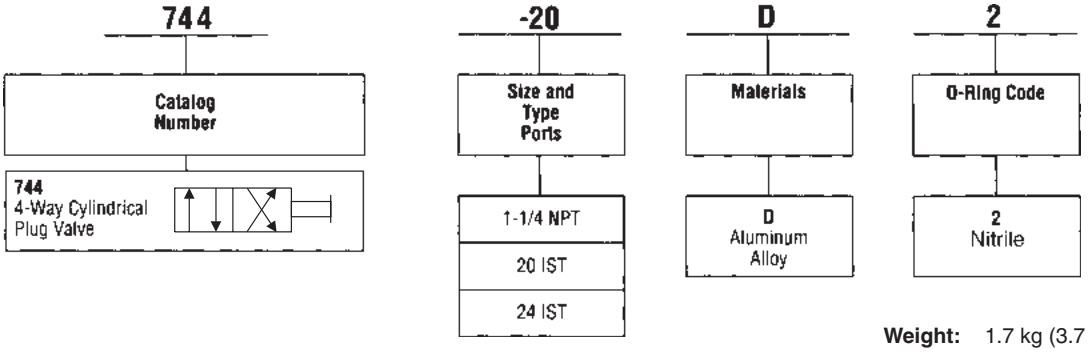

Weight: 1.7 kg (3.7 lbs.

3000-F1.p65, dd

Parker Hannifin Corporation
Hydraulic Valve Division
Elyria, Ohio, USA

Return to ALPHA TOC
Return to SECTION TOC

Accessories

General Description

Series 910 hand pumps are double-acting providing primary, backup or emergency hydraulic power. The hand pumps can be utilized anywhere; at any time, that hydraulic power is required, since the hand pump does not require an electrical or mechanical power source. They can be mounted in any position.

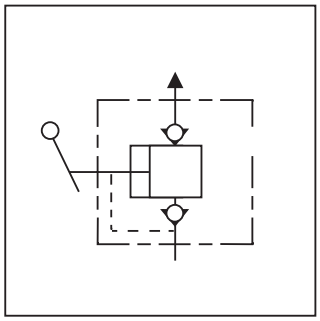

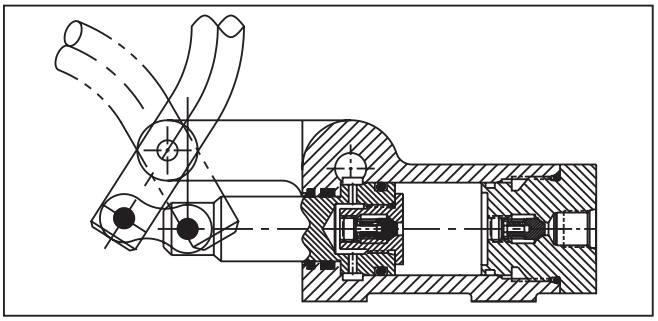

Operation

Piston Stroke — Direction A
Chamber C1 draws in fluid through INLET while chamber C2 discharges fluid through OUTLET.

Piston Stroke — Direction B
Volume in chamber C1 is transferred to chamber C2. Since chamber C2 holds half the volume of chamber C1, half of the fluid in chamber C2 is discharged through the OUTLET port.

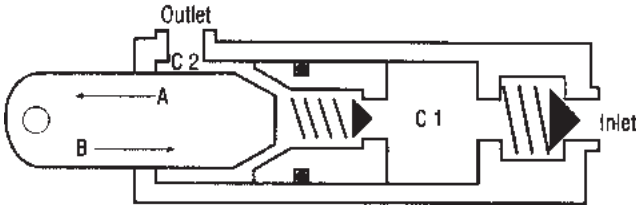

Features

- Lightweight, double-acting hand pump delivers 33 cc (2 cu. in.) per cycle, 2 strokes.
- Provides long maintenance-free service for any. application where auxiliary hydraulic power is required.

G

Specifications

Operating Pressure Range	0 to 103 Bar (1500 PSI) 1500 PSI based on 29 kg (64 lbs.) handle force at 578 mm (22.75 in.) handle/arm length
Displacement	33 cc (2 cu. in.) per cycle 2 strokes
Operating Temperature Range	-40°C to 121°C (-40°F to 250°F)
Operating Arc	60°
Fluids	Hydraulic oil
Sizes	IST 6, IST 8
Type Ports	IST
Mounting	Flanges (4) with 7 mm dia (.281 in. dia.) holes

Materials:	
Body	Aluminum alloy
Piston Handle Extension	Steel
Poppets	Stainless steel type 303
Springs	Stainless steel Type AMS5688
O-Rings	Synthetic rubber
Backup Rings	PTFE
Scraper	Synthetic rubber
Molded Seal	Synthetic rubber
Handle	Extension furnished 508 mm (20 in.) long. Total 578 mm (22.75 in.)

Ordering Information

910	–		D	2	B	C
Hand Pump		Size and Type	Materials	O-Ring	Discharge Port Location	Design Series

Code	Description
D	Aluminum Alloy

Code	Description
6	IST* port
8	IST* port

* IST, military straight thread port, SAE compatible.

Code	Description
2	Nitrile

Code	Description
B	Both Sides*

Weight: 2.3 kg (5 lbs.)

Dimensions

Inch equivalents for millimeter dimensions are shown in (**)

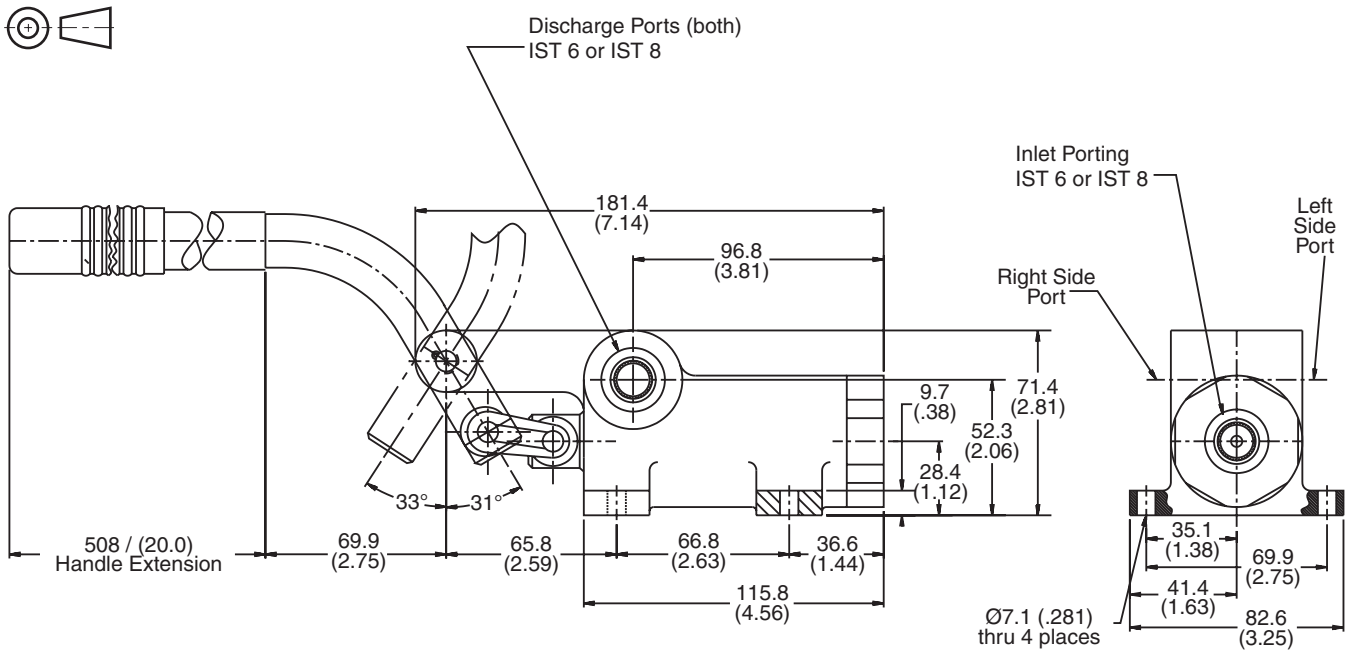

3000-G1.p65, dd

Parker Hannifin Corporation
Hydraulic Valve Division
Elyria, Ohio, USA

General Description

Series 910N hand pumps are double-acting with needle valve providing primary, backup or emergency hydraulic power. Series 910N incorporates a cartridge needle valve that provides an easy method of bleeding an actuator or system back to tank. The hand pumps can be utilized anywhere; at any time, that hydraulic power is required, since the hand pump does not require an electrical or mechanical power source. They can be mounted in any position.

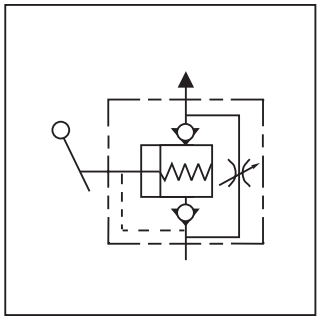

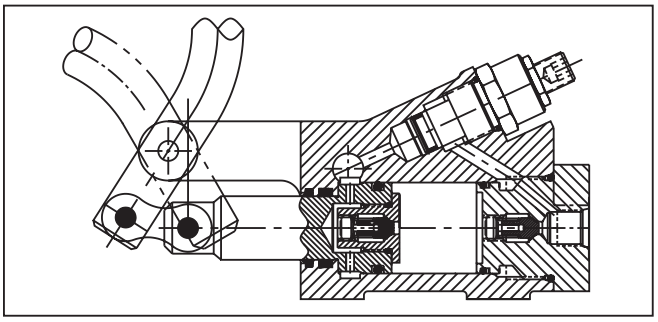

Operation

Piston Stroke — Direction A
Chamber C1 draws in fluid through INLET while chamber C2 discharges fluid through OUTLET.

Piston Stroke — Direction B
Volume in chamber C1 is transferred to chamber C2. Since chamber C2 holds half the volume of chamber C1, half of the fluid in chamber C2 is discharged through the OUTLET port.

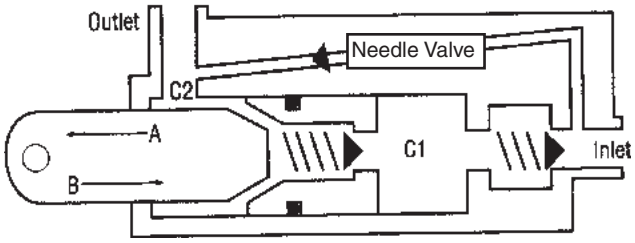

Features

- Lightweight, double-acting hand pump delivers 33 cc (2 cu. in.) per cycle, 2 strokes.
- Needle valve cartridge is a dependable, proven. component that will allow the bleed-off of a circuit back to tank.
- Provides long maintenance-free service for any application where auxiliary hydraulic power is required.

Specifications

Operating Pressure Range	0 to 103 Bar (1500 PSI) 1500 PSI based on 29 kg (64 lbs.) handle force at 578 mm (22.75 in.) handle/arm length
Displacement	33 cc (2 cu. in.) per cycle 2 strokes
Operating Temperature Range	-40°C to 121°C (-40°F to 250°F)
Operating Arc	60°
Fluids	Hydraulic oil
Sizes	IST 6, IST 8
Type Ports	IST
Mounting	Flanges (4) with 7 mm dia. (.281 in. dia.) holes

Materials: **Body**	Aluminum alloy
Piston **Handle Extension**	Steel
Poppets	Stainless steel type 303
Springs	Stainless steel Type AMS5688
O-Rings	Synthetic rubber
Backup Rings	PTFE
Scraper	Synthetic rubber
Molded Seal	Synthetic rubber
Handle	Extension furnished 508 mm (20 in.) long. Total 578 mm (22.75 in.)
Needle Valve Cartridge	Steel

Ordering Information

910N		D	2	B	C
Hand Pump with Needle Valve	Size and Type	Materials	O-Ring	Discharge Port Location	Design Series

Code	Description
6	IST* port
8	IST* port

* IST, military straight thread port, SAE compatible.

Code	Description
D	Aluminum Alloy

Code	Description
2	Nitrile

Code	Description
B	Both Sides*

* Note: one port to be plugged at installation.

Weight: 2.7 kg (6 lbs.)

Dimensions

Inch equivalents for millimeter dimensions are shown in (**)

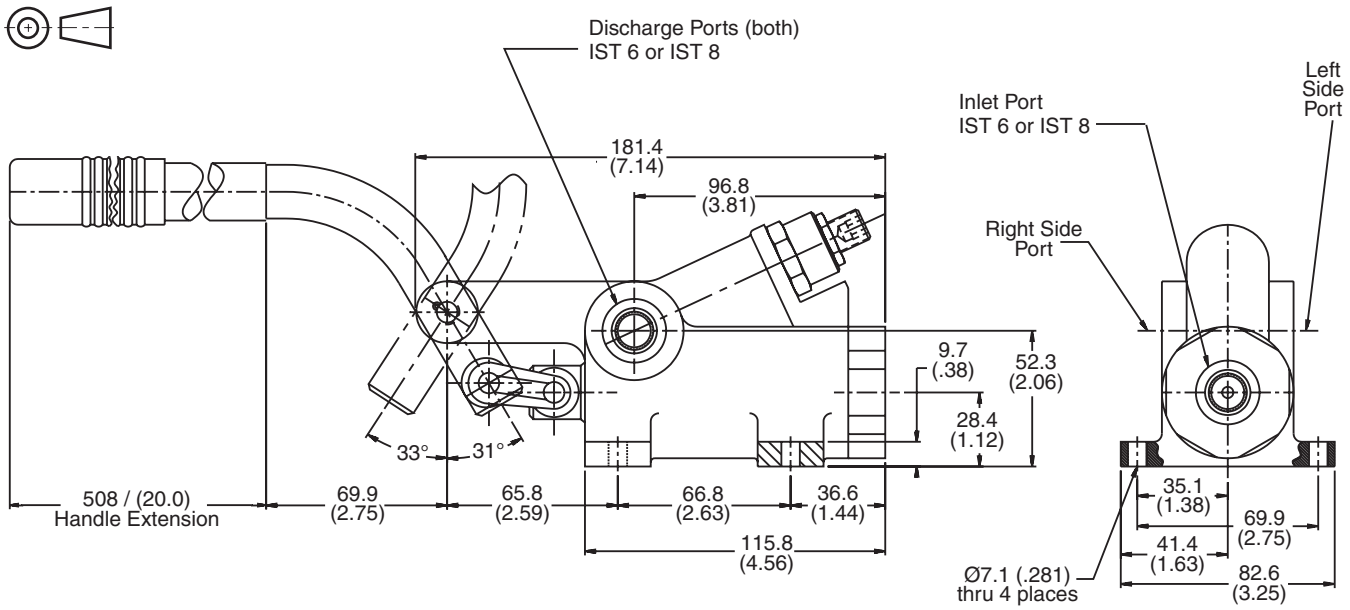

3000-G1.p65, dd

Parker Hannifin Corporation
Hydraulic Valve Division
Elyria, Ohio, USA

General Description

Series 910R hand pumps are double-acting with relief valve providing primary, backup or emergency hydraulic power. Series 910R incorporates a cartridge relief that provides a smooth, quick unloading of the pump should the system become overloaded. The hand pumps can be utilized anywhere; at any time, that hydraulic power is required, since the hand pump does not require an electrical or mechanical power source. They can be mounted in any position.

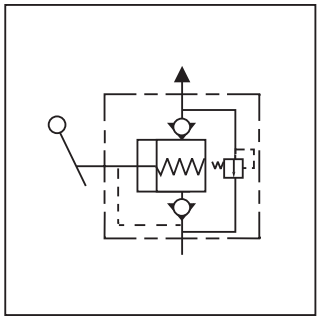

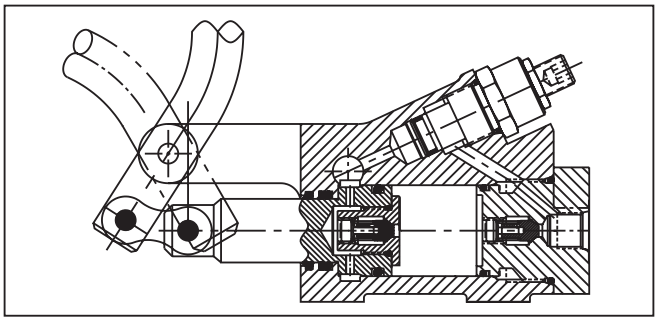

Operation

Piston Stroke — Direction A
Chamber C1 draws in fluid through INLET while chamber C2 discharges fluid through OUTLET.

Piston Stroke — Direction B
Volume in chamber C1 is transferred to chamber C2. Since chamber C2 holds half the volume of chamber C1, half of the fluid in chamber C2 is discharged through the OUTLET port.

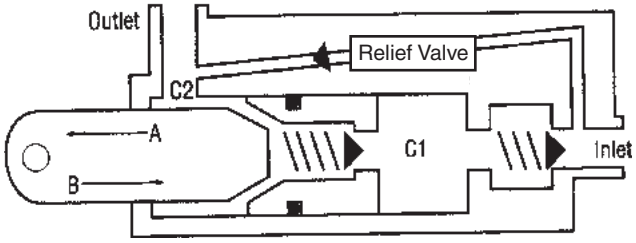

Features

- Lightweight, double-acting hand pump delivers 33 cc (2 cu. in.) per cycle, 2 strokes.
- Relief valve cartridge is a dependable, proven component that will protect any circuit from over pressurizing and adjustable from 6.8 to 103 Bar (100 to 1500 PSI).
- Provides long maintenance-free service for any application where auxiliary hydraulic power is required.

Specifications

Operating Pressure Range	0 to 103 Bar (1500 PSI) 1500 PSI based on 29 kg (64 lbs.) handle force at 578 mm (22.75 in.) handle/arm length
Displacement	33 cc (2 cu. in.) per cycle 2 strokes
Operating Temperature Range	-40°C to 121°C (-40°F to 250°F)
Operating Arc	60°
Fluids	Hydraulic oil
Sizes	IST 6, IST 8
Type Ports	IST
Mounting	Flanges (4) with 7 mm dia. (.281 in. dia.) holes

Materials: **Body**	Aluminum alloy
Piston **Handle Extension**	Steel
Poppets	Stainless steel type 303
Springs	Stainless steel Type AMS5688
O-Rings	Synthetic rubber
Backup Rings	PTFE
Scraper	Synthetic rubber
Molded Seal	Synthetic rubber
Handle	Extension furnished 508 mm (20 in.) long. Total 578 mm (22.75 in.)
Relief Valve Cartridge	Steel

3000-G1.p65, dd

Parker Hannifin Corporation
Hydraulic Valve Division
Elyria, Ohio, USA

Ordering Information

910R		D	2	B	C
Hand Pump with Relief Valve	Size and Type	Materials	O-Ring	Discharge Port Location	Design Series

Code	Description
6	IST* port
8	IST* port

* IST, military straight thread port, SAE compatible.

Code	Description
D	Aluminum Alloy

Code	Description
2	Nitrile

Code	Description
B	Both Sides*

* Note: one port to be plugged at installation.

Weight: 2.7 kg (6 lbs.)

Dimensions

Inch equivalents for millimeter dimensions are shown in (**)

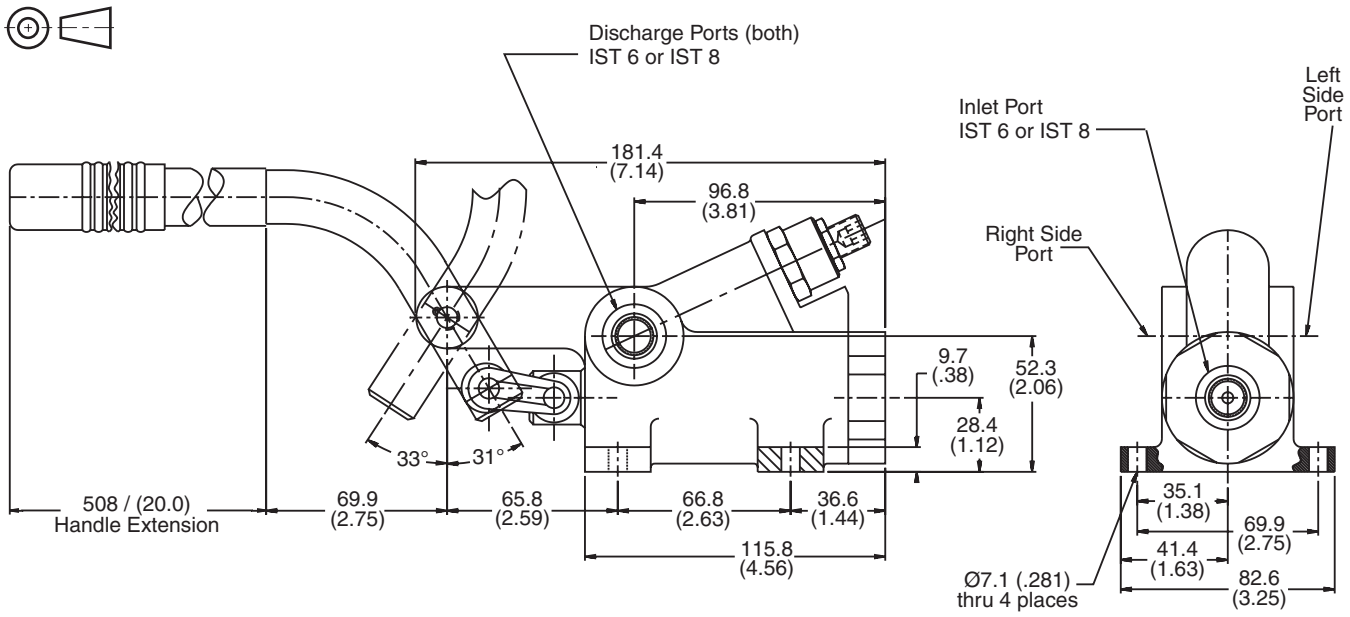

3000-G1.p65, dd

Parker Hannifin Corporation
Hydraulic Valve Division
Elyria, Ohio, USA

General Description

Series 913 hand pumps are single-acting providing primary, backup, or emergency hydraulic power. The hand pumps can be utilized anywhere; at any time, that hydraulic power is required, since the hand pump does not require an electrical or mechanical power source. Series 913 hand pumps have two stages. The first stage allows a large volume to be pumped so that a cylinder or actuator quickly moves into its working position. At the second stage, the hand pump sequences to a lower volume at higher pressures.

Features

- When first stage reaches 0.7 Bar (10 PSI) maximum, pump autaomatically sequences to a lower volume at pressures up to 345 Bar (5000 PSI).

Operation

Piston Stroke — Direction A
Piston draws in fluid through INLET, charging chamber C1.

Piston Stroke — Direction B
Stage 1 (to 10 PSI): Volume C1 discharged through OUTLET.

Stage 2 (over 20 PSI): Build up of pressure in system causes piston to remain in retracted position (shown), and plunger moves forward, discharging low volume through OUTLET at high pressure. Piston remains in retracted position on next A stroke.

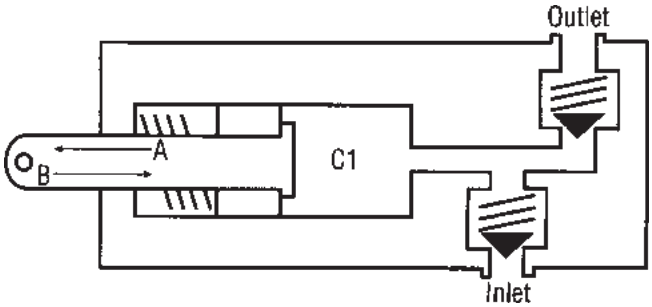

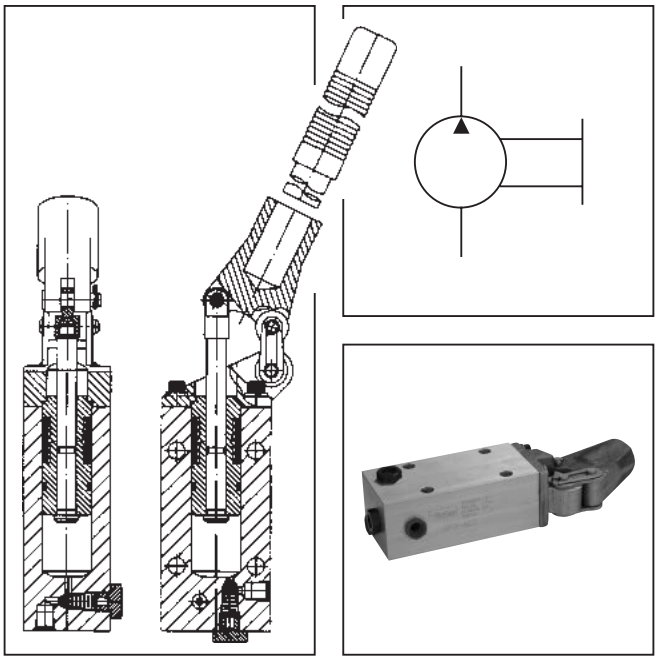

Specifications

Service App.	Hydraulic oil	
Pressure Range	Working:	0 - 345 Bar (0 - 5000 PSI) [345 Bar (5000 PSI] based on 50 lb. handle load at 23 in.]
Sizes	IST	4
Ports	IST	Internal straight threads
Type	Single-acting	
Mounting	Holes (4) through, 9.9 mm (0.390 in.) dia.	
Displacement	16.4 cc - 0.7 Bar (1 cu. in. - 10 PSI 3.1 cc - 345 Bar (0.19 cu. in. - 5000 PSI)	
Material	Body	Aluminum alloy
	Piston, Plunger	416 Stainless steel
	Springs	Stainless steel
	O-rings	Synthetic rubber
	Back-up rings	PTFE
Operating Arc	55°	
Handle	Not furnished. Available on special order	
Temperature Range	-40°C to +121°C (-40°F to +250°F)	

G

3000-G1.p65, dd

Parker Hannifin Corporation
Hydraulic Valve Division
Elyria, Ohio, USA

Ordering Information

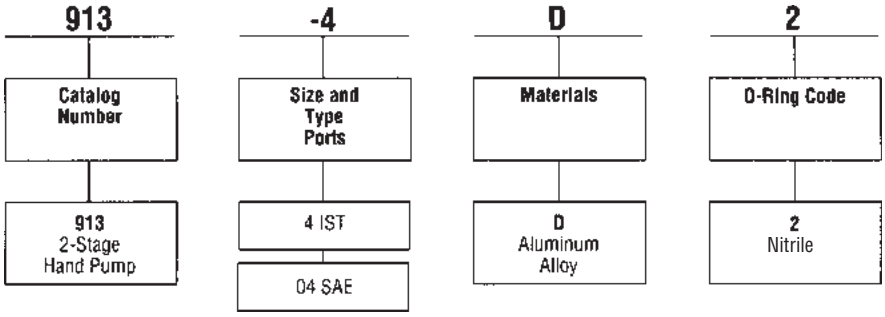

Weight: 1.6 kg (3.5 lbs.)

Dimensions

Shown in inches.

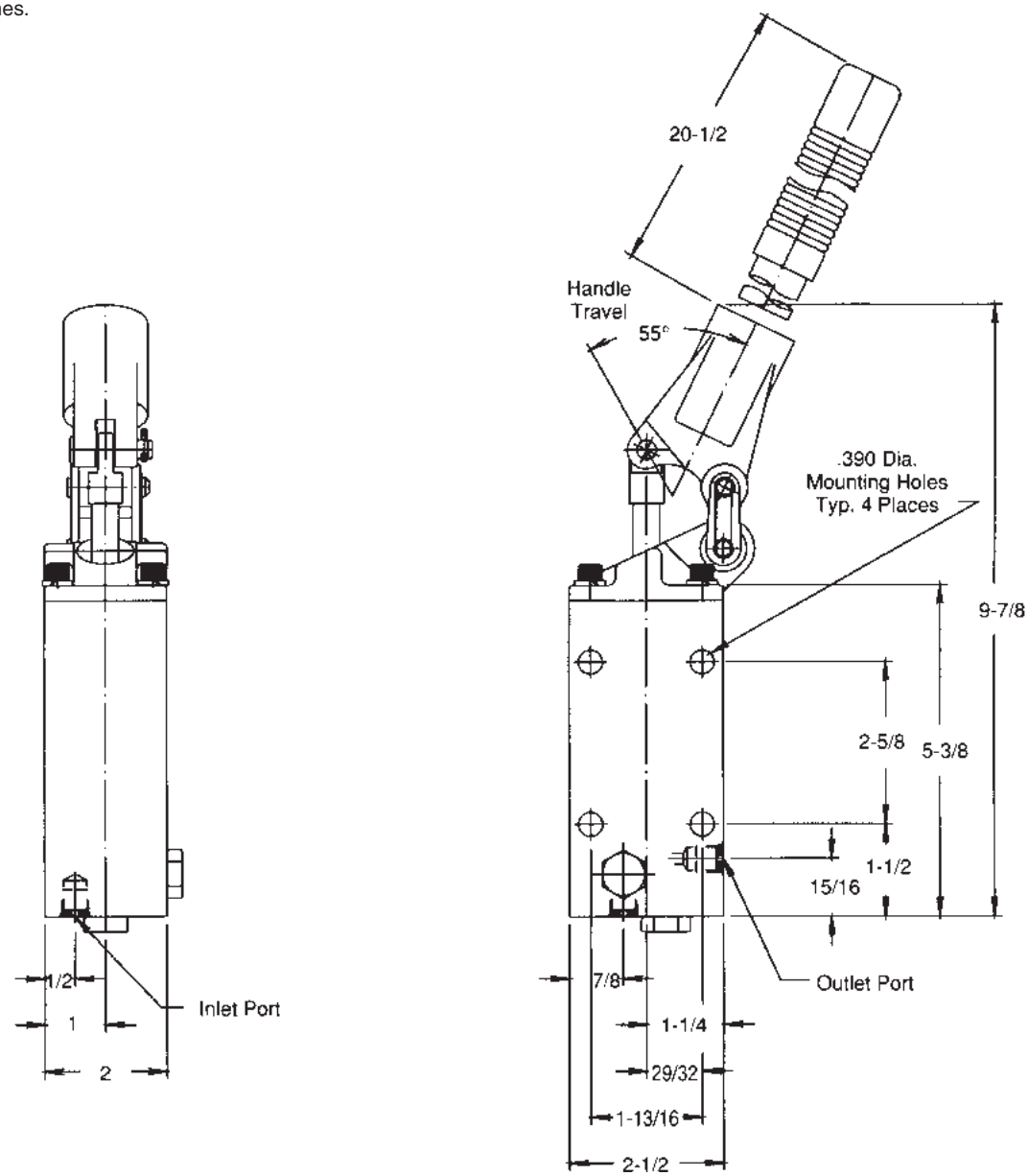

3000-G1.p65, dd

Parker Hannifin Corporation
Hydraulic Valve Division
Elyria, Ohio, USA

General Description

Series 914 hand pumps are double-acting providing primary, backup, or emergency hydraulic power. The hand pumps can be utilized anywhere; at any time, that hydraulic power is required, since the hand pump does not require an electrical or mechanical power source.

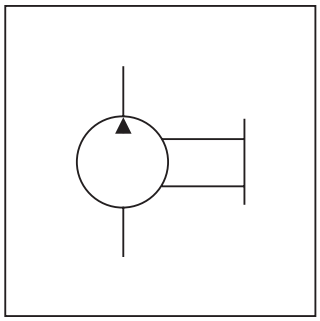

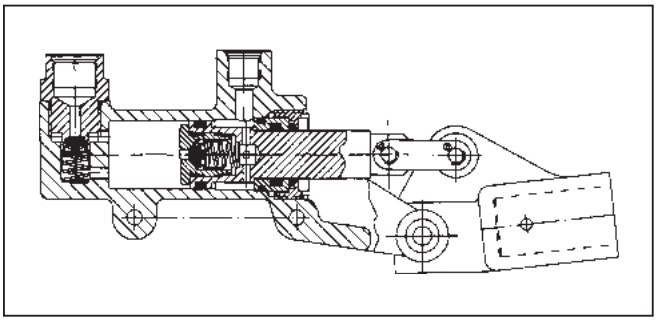

Features

- Integral resilient seated valves prevent backflow during operation.

Operation

Piston Stroke — Direction A
Chamber C1 draws in fluid through INLET while chamber C2 discharges fluid through OUTLET.

Piston Stroke — Direction B
Volume in chamber C1is transferred to chamber C2. Since chamber C2 holds half the volume of chamber C1, half of the fluid in chamber C2 is discharged through the OUTLET port.

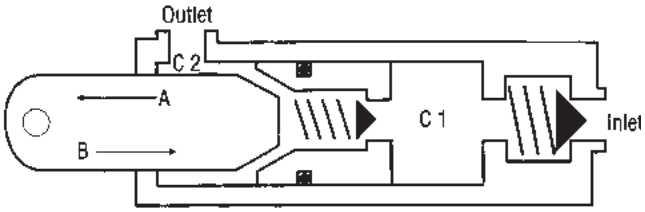

Specifications

Service App.	Hydraulic oil	
Pressure Range	Working:	0 - 103.5 Bar (0 - 1500 PSI) [103.5 Bar (1500 PSI) based on 60 lb. handle load at 22 1/2 in.]
	Proof:	155.3 Bar (2250 PSI)
	Burst:	258.8 Bar (3750 SPI)
Sizes	IST IST	8 (inlet) 6 (outlet)
Ports	IST	Internal straight threads, AND10050
Type	Double-acting	
Mounting	Holes (2) through, 6.5 mm (0.257 in.) dia.	
Displacement	20.5 to 24.6 cc (1.25 to 1.50 cu. in.) per cycle (2 strokes)	
Material	Body	Aluminum alloy
	Piston	Steel
	Poppets	303 Stainless steel
	Springs	AMS5688 Stainless steel
	Molded seals	Synthetic rubber
	Back-up rings	PTFE
	Scraper	Brass
	O-rings	Synthetic rubber
Operating Arc	60° maximum	
Handle	Not furnished. Available on special order	
Temperature Range	-54°C to +121°C (-65°F to +250°F)	

G

3000-G1.p65, dd

Parker Hannifin Corporation
Hydraulic Valve Division
Elyria, Ohio, USA

Ordering Information

914	-8	D	27
Catalog Number	Size and Type Ports	Materials	O-Ring Code
914 Hand Pump to 1500 P.S.I.	8 IST Inlet 6 IST Outlet	D Aluminum Alloy	27 MIL-P-25732

Weight: 1.0 kg (2.3 lbs.)

Dimensions

Shown in inches.

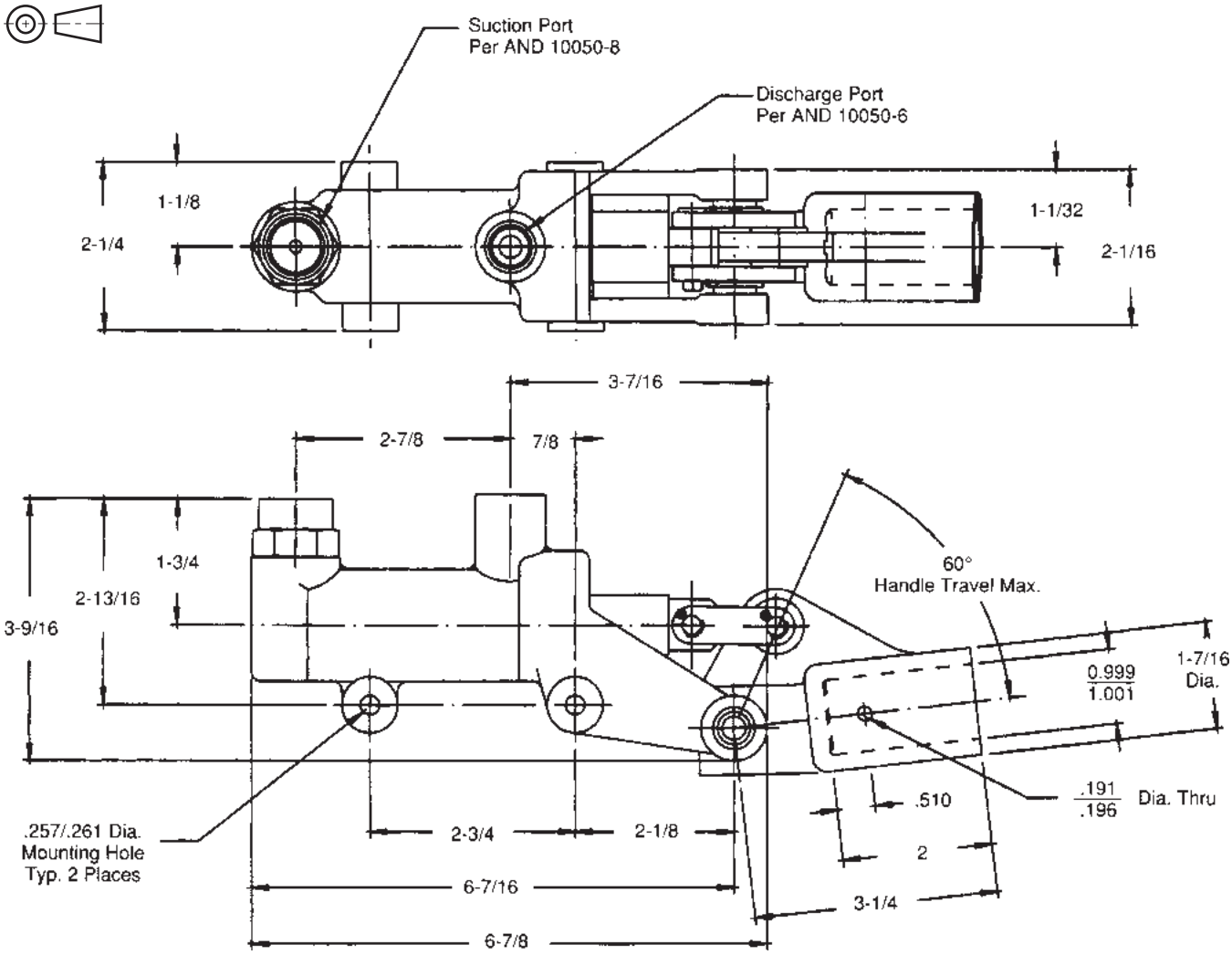

G

3000-G1.p65, dd

Parker Hannifin Corporation
Hydraulic Valve Division
Elyria, Ohio, USA

General Description

Series 915 hand pumps are double-acting providing primary, backup, or emergency hydraulic power. The hand pumps can be utilized anywhere; at any time, that hydraulic power is required, since the hand pump does not require an electrical or mechanical power source.

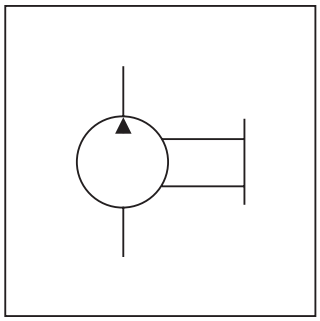

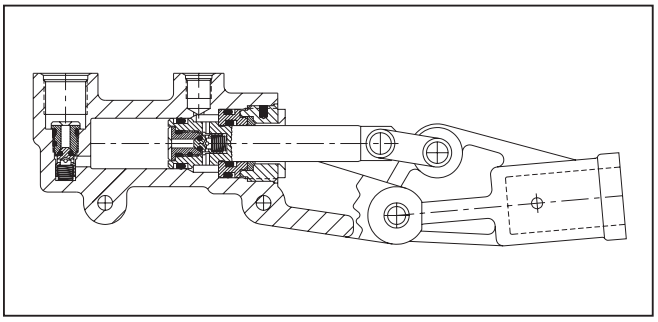

Features

- Integral resilient seated valves prevent backflow during operation.

Operation

Piston Stroke — Direction A
Chamber C1 draws in fluid through INLET while chamber C2 discharges fluid through OUTLET.

Piston Stroke — Direction B
Volume in chamber C1 is transferred to chamber C2. Since chamber C2 holds half the volume of chamber C1, half of the fluid in chamber C2 is discharged through the OUTLET port.

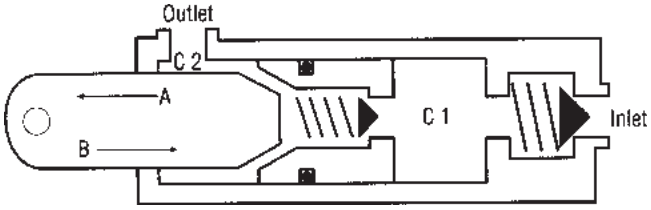

Specifications

Service App.	Hydraulic oil	
Pressure Range	Working:	0 - 207 Bar (0 - 3000 PSI) [207 Bar (3000 PSI) based on 60 lb. handle load at 22 1/2 in.]
	Proof:	310.5 Bar (4500 PSI)
	Burst:	517.5 Bar (7500 PSI)
Sizes	IST IST	8 (inlet) 4 (outlet)
Ports	IST	Internal straight threads, 915-8D27 (AND10050), 916-8D27 (MS33649)
Type	Double-acting	
Mounting	Holes (2) through, 6.5 mm (0.257 in.) dia.	
Displacement	11.5 cc (0.7 cu. in.) per cycle (2 strokes)	
Material	Body	Aluminum alloy
	Piston Rod	420 Stainless steel
	Poppets	303 Stainless steel
	Springs	18-8 Stainless steel
	Molded seals	Synthetic rubber
	Back-up rings	PTFE
	Scraper	Brass
	O-rings	Synthetic rubber
Operating Arc	60°	
Handle	Not furnished.	
Temperature Range	-54°C to +121°C (-65°F to +250°F)	

G

Ordering Information

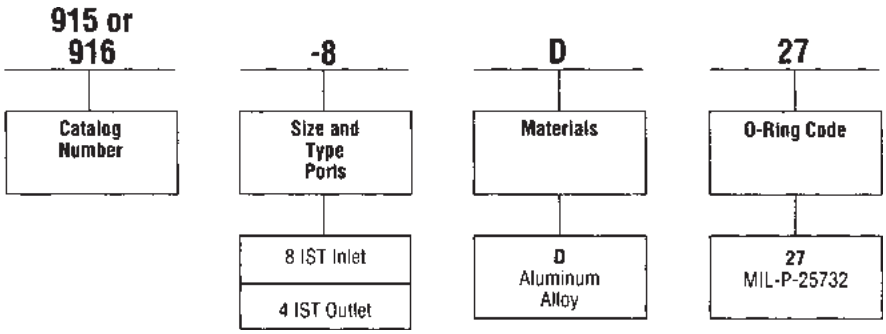

Weight: 1.0 kg (2.1 lbs.)

Dimensions

Shown in inches.

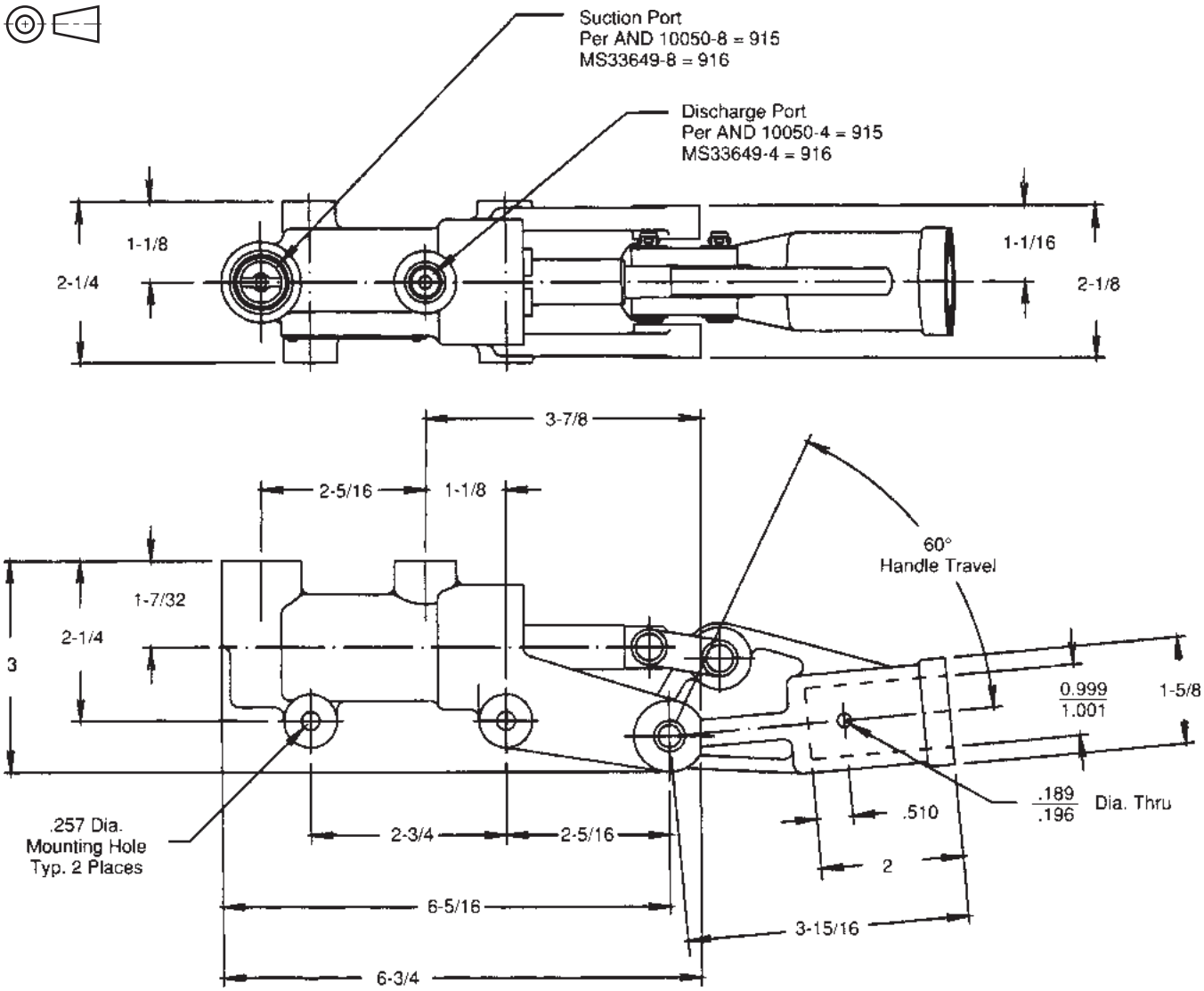

3000-G1.p65, dd

Parker Hannifin Corporation
Hydraulic Valve Division
Elyria, Ohio, USA

General Description

Series GTS gage isolator valves have a push-to-read knob that delivers instant pressure to the gage, yet totally isolates the gage from the fluid line until the knob is pressed. When the knob is released, a spring-loaded spool closes instantly and drains all fluid from the gage back into the reservoir. A hardened steel spool custom-fitted to the all-steel valve body minimizes leakage and maintenance. Partial snubbing action in the valve protects the gage from surge damage when the actuating knob is pushed. Suitable for line pressures up to 207 Bar (3000 PSI) maximum.

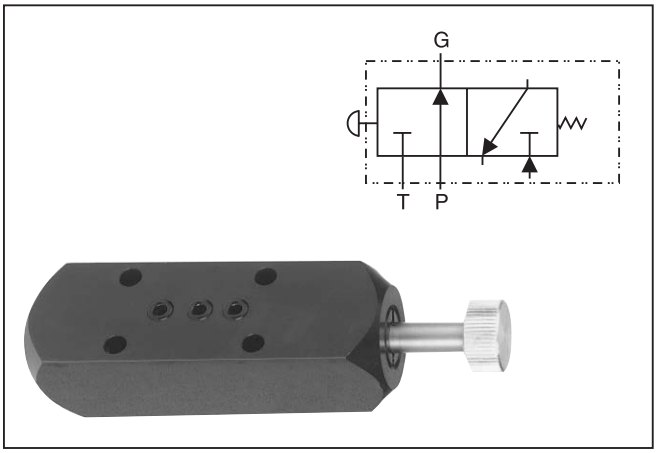

Features

- Partial snubbing action protects the gage from surge damage.
- Has a hardened steel spool.

Specifications

Port Size	NPTF 1/4"
Mounting	Subplate

Ordering Information

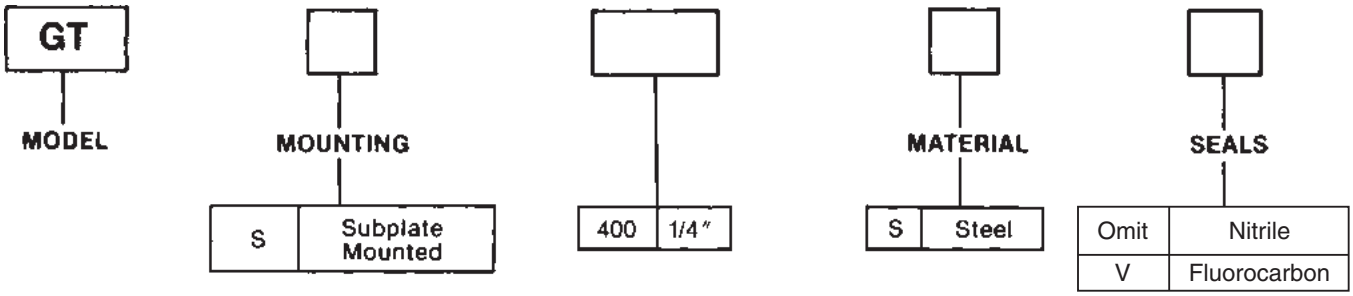

Weight: 1.1 lbs. (5.0 Kg)

Bolt Kits

Valve	Bolt Kit	Bolt Specification*	Bolt Torque
GTS 400	BK13	8-32 x 1-3/8"	50 IN.-LBS.–STEEL MANIFOLDS 35 IN.-LBS.–ALUMINUM MANIFOLDS

*Use SAE Grade 8 or Better

Millimeter equivalents for inch dimensions are shown in (**)

Model GTS400S*1*

Manifold mounted, push to read Isolator Valve

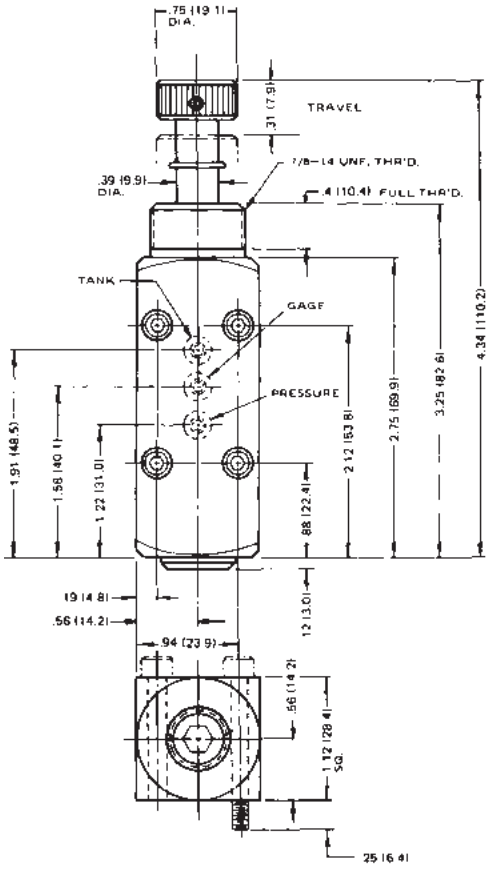

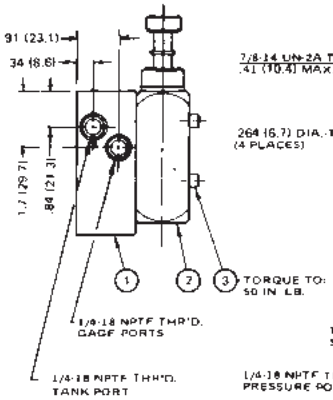

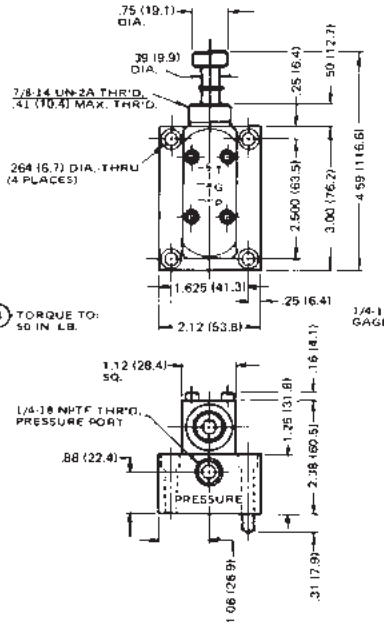

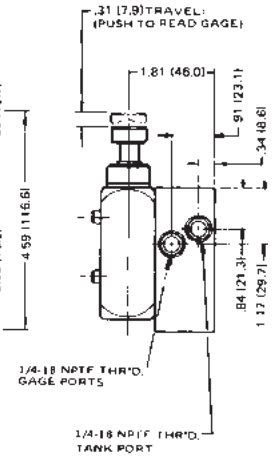

G

3000-G1.p65, dd

Parker Hannifin Corporation
Hydraulic Valve Division
Elyria, Ohio, USA

General Description

Series MFB flow control valves are designed for applications where it is necessary to supply flow from a single pump to two separate circuits (Snow plow attachment and a dump body). One of the two circuits will be the primary circuit and receive priority flow from the Series MFB valve. Any excess flow above the priority requirement is available to a second circuit.

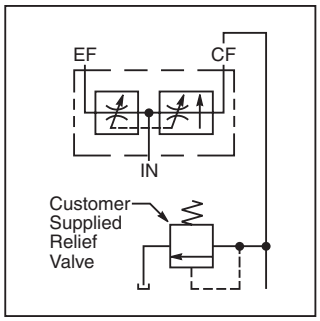

Features

- Hardened parts provide long life.
- In-line mounting.
- When reverse flow is applied from the priority port, the valve acts as a fixed orifice.
- Dial style knob provides an easy adjustable method for setting flow rate.

Operation

Series MFB flow controls use a control orifice in a spring-biased, compensated spool to supply a priority flow requirement. Any flow over and above the priority flow will be directed to a bypass port. The priority flow is fully compensated, meaning that as load pressure at the priority port changes, the priority flow will change to meet that requirement.

If the pump supply is less than required for the priority circuit, all flow will go to the priority circuit, and none will be diverted to the excess flow port.

This valve can also be used as a restrictive-type, pressure compensated flow control by plugging the excess flow port.

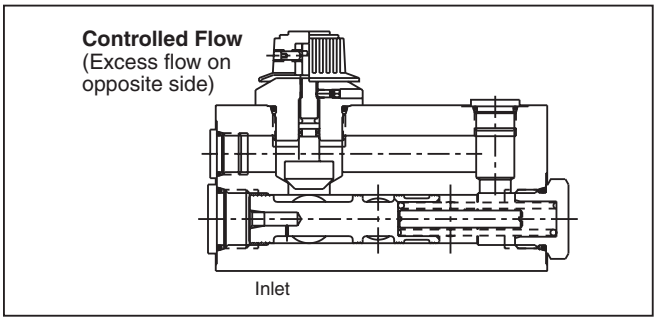

Caution: If the priority flow port is totally blocked, the compensator spool shifts completely to block the bypass port thus closing the valve completely. If a fixed displacement pump is being used in this type of application, there must be a relief mounted between the pump and the Series MFB flow control valve.

G

Specifications

Maximum Inlet Flow	MFB-025 – 93.75 LPM (25 GPM) MFB-050 – 187.5 LPM (50 GPM)	**Operating Temp. Range (Ambient)**	-31.7°C to +121.1°C (-25°F to +250°F) (Fluorocarbon Seals Only)
Maximum Control Flow	MFB-025 – 56.25 LPM (15 GPM) MFB-050 – 56.25 LPM (15 GPM)	**Internal Material**	Steel
Operating Press.	210 Bar (3000 PSI)	**Body Material**	Steel (chromate plated)
Flow Accuracy	±10%	**Filtration**	ISO code 16/13 SAE Class 4 or better
Compensator Bias Spring	6.2 Bar (90 PSI) Differential	**Mounting**	In-line (no restrictions)

Ordering Information

MFB — [ ] — **P** **AP** **K** — [ ]

- MFB: Mobile Flow Control in Body
- [ ]: Nominal Inlet Flow
- P: Priority Flow
- AP: Style
- K: Knob
- [ ]: Porting

Code	Flow
025	56.25 LPM (15 GPM)
050	56.25 LPM (15 GPM)

Code	Description
AP	Adjustable Priority

Code	Style
K	Knob

MFB-025		MFB-050	
Code	**Type**	**Code**	**Type**
06	3/8" NPTF	12	3/4" NPTF
52	SAE – 8	54	SAE – 12
		56	SAE – 16

Weight:

MFB-025, MFB-050 2.7 kg (6.0 lbs.)

3000-G1.p65, dd

Parker Hannifin Corporation
Hydraulic Valve Division
Elyria, Ohio, USA

Inch equivalents for millimeter dimensions are shown in (**)

	A	B	C
MFB-025	34.9 (1.38)	25.4 (1.00)	50.8 (2.00)
MFB-050	60.5 (2.38)	38.1 (1.50)	76.2 (3.00)

	Code	"EF" Port	"IN" Port	"CF" Port
MFB-025	06	3/8" NPTF	3/8" NPTF	3/8" NPTF
	52	#8 SAE	#8 SAE	#8 SAE
MFB-050	12	3/4" NPTF	3/4" NPTF	3/4" NPTF
	54	#12 SAE	#12 SAE	#12 SAE
	56	#16 SAE	#16 SAE	#12 SAE

Knob Adjustable

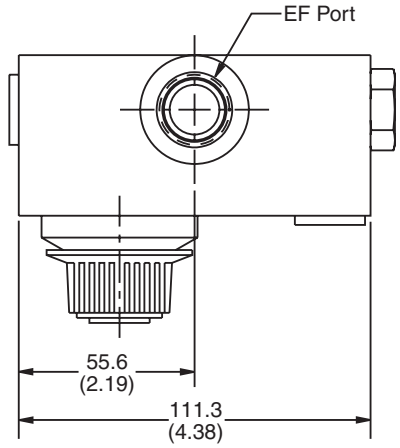

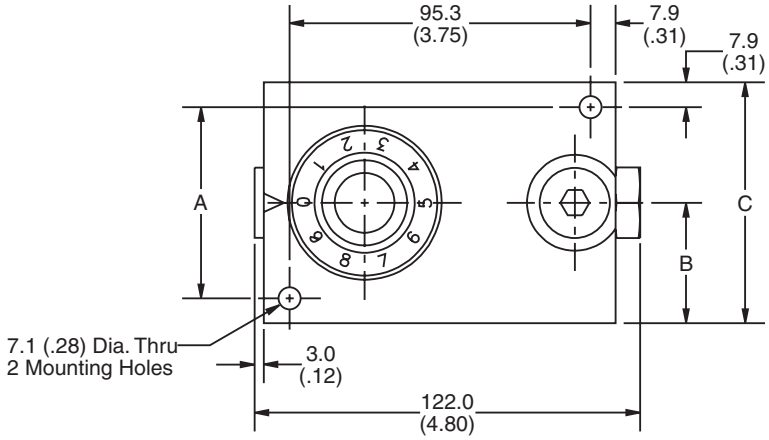

Stem Adjustable

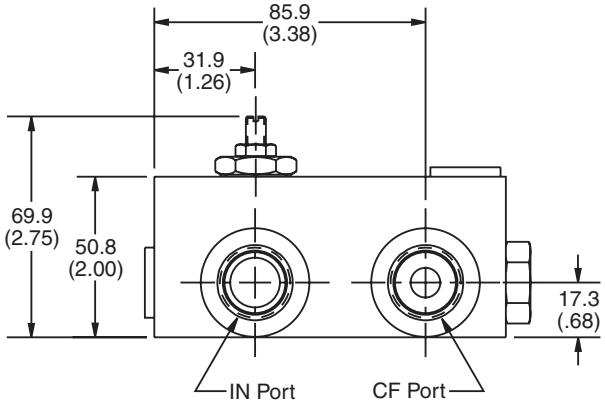

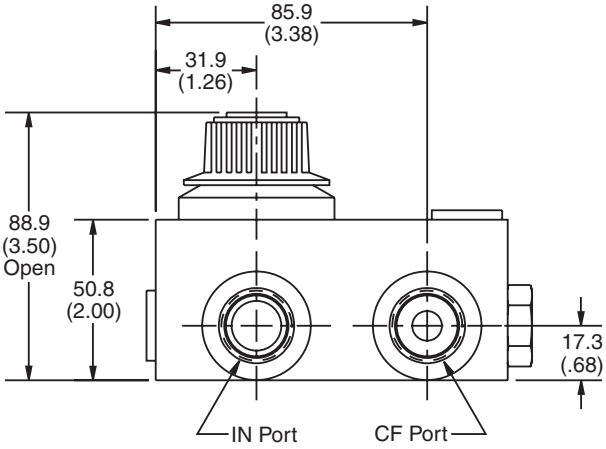

G

3000-G1.p65, dd

Parker Hannifin Corporation
Hydraulic Valve Division
Elyria, Ohio, USA

Offer of Sale

Return to ALPHA TOC
Return to SECTION TOC

The items described in this document and other documents or descriptions provided by Parker Hannifin Corporation, its subsidiaries and its authorized distributors are hereby offered for sale at prices to be established by Parker Hannifin Corporation, its subsidiaries and its authorized distributors. This offer and its acceptance by any customer ("Buyer") shall be governed by all of the following Terms and Conditions. Buyer's order for any such items, when communicated to Parker Hannifin Corporation, its subsidiary or an authorized distributor ("Seller") verbally or in writing, shall constitute acceptance of this offer.

1. Terms and Conditions of Sale: All descriptions, quotations, proposals, offers, acknowledgments, acceptances and sales of Seller's products are subject to and shall be governed exclusively by the terms and conditions stated herein. Buyer's acceptance of any offer to sell is limited to these terms and conditions. Any terms or conditions in addition to, or inconsistent with those stated herein, proposed by Buyer in any acceptance of an offer by Seller, are hereby objected to. No such additional, different or inconsistent terms and conditions shall become part of the contract between Buyer and Seller unless expressly accepted in writing by Seller. Seller's acceptance of any offer to purchase by Buyer is expressly conditional upon Buyer's assent to all the terms and conditions stated herein, including any terms in addition to, or inconsistent with those contained in Buyer's offer, Acceptance of Seller's products shall in all events constitute such assent.

2. Payment: Payment shall be made by Buyer net 30 days from the date of delivery of the items purchased hereunder. Amounts not timely paid shall bear interest at the maximum rate permitted by law for each month or portion thereof that the Buyer is late in making payment. Any claims by Buyer for omissions or shortages in a shipment shall be waived unless Seller receives notice thereof within 30 days after Buyer's receipt of the shipment.

3. Delivery: Unless otherwise provided on the face hereof, delivery shall be made F.O.B. Seller's plant. Regardless of the method of delivery, however, risk of loss shall pass to Buyer upon Seller's delivery to a carrier. Any delivery dates shown are approximate only and Seller shall have no liability for any delays in delivery.

4. Warranty: Seller warrants that the items sold hereunder shall be free from defects in material or workmanship for a period of 18 months from date of shipment from Parker Hannifin Corporation. **THIS WARRANTY COMPRISES THE SOLE AND ENTIRE WARRANTY PERTAINING TO ITEMS PROVIDED HEREUNDER. SELLER MAKES NO OTHER WARRANTY, GUARANTEE, OR REPRESENTATION OF ANY KIND WHATSOEVER. ALL OTHER WARRANTIES, INCLUDING BUT NOT LIMITED TO, MERCHANTABILITY AND FITNESS FOR PURPOSE, WHETHER EXPRESS, IMPLIED, OR ARISING BY OPERATION OF LAW, TRADE USAGE, OR COURSE OF DEALING ARE HEREBY DISCLAIMED. NOTWITHSTANDING THE FOREGOING, THERE ARE NO WARRANTIES WHATSOEVER ON ITEMS BUILT OR ACQUIRED WHOLLY OR PARTIALLY, TO BUYER'S DESIGNS OR SPECIFICATIONS.**

5. Limitation Of Remedy: SELLER'S LIABILITY ARISING FROM OR IN ANY WAY CONNECTED WITH THE ITEMS SOLD OR THIS CONTRACT SHALL BE LIMITED EXCLUSIVELY TO REPAIR OR REPLACEMENT OF THE ITEMS SOLD OR REFUND OF THE PURCHASE PRICE PAID BY BUYER, AT SELLER'S SOLE OPTION. IN NO EVENT SHALL SELLER BE LIABLE FOR ANY INCIDENTAL, CONSEQUENTIAL OR SPECIAL DAMAGES OF ANY KIND OR NATURE WHATSOEVER, INCLUDING BUT NOT LIMITED TO LOST PROFITS ARISING FROM OR IN ANY WAY CONNECTED WITH THIS AGREEMENT OR ITEMS SOLD HEREUNDER, WHETHER ALLEGED TO ARISE FROM BREACH OF CONTRACT, EXPRESS OR IMPLIED WARRANTY, OR IN TORT, INCLUDING WITHOUT LIMITATION, NEGLIGENCE, FAILURE TO WARN OR STRICT LIABILITY.

6. Changes, Reschedules and Cancellations: Buyer may request to modify the designs or specifications for the items sold hereunder as well as the quantities and delivery dates thereof, or may request to cancel all or part of this order, however, no such requested modification or cancellation shall become part of the contract between Buyer and Seller unless accepted by Seller in a written amendment to this Agreement. Acceptance of any such requested modification or cancellation shall be at Seller's discretion, and shall be upon such terms and conditions as Seller may require.

7. Special Tooling: A tooling charge may be imposed for any special tooling, including without limitation, dies, fixtures, molds and patterns, acquired to manufacture items sold pursuant to this contract. Such special tooling shall be and remain Seller's property notwithstanding payment of any charges by Buyer. In no event will Buyer acquire any interest in apparatus belonging to Seller which is utilized in the manufacture of the items sold hereunder, even if such apparatus has been specially converted or adapted for such manufacture and notwithstanding any charges paid by Buyer. Unless otherwise agreed, Seller shall have the right to alter, discard or otherwise dispose of any special tooling or other property in its sole discretion at any time.

8. Buyer's Property: Any designs, tools, patterns, materials, drawings, confidential information or equipment furnished by Buyer or any other items which become Buyer's property, may be considered obsolete and may be destroyed by Seller after two (2) consecutive years have elapsed without Buyer placing an order for the items which are manufactured using such property, Seller shall not be responsible for any loss or damage to such property while it is in Seller's possession or control.

9. Taxes: Unless otherwise indicated on the face hereof, all prices and charges are exclusive of excise, sales, use, property, occupational or like taxes which may be imposed by any taxing authority upon the manufacture, sale or delivery of the items sold hereunder. If any such taxes must be paid by Seller or if Seller is liable for the collection of such tax, the amount thereof shall be in addition to the amounts for the items sold. Buyer agrees to pay all such taxes or to reimburse Seller therefore upon receipt of its invoice. If Buyer claims exemption from any sales, use or other tax imposed by any taxing authority, Buyer shall save Seller harmless from and against any such tax, together with any interest or penalties thereon which may be assessed if the items are held to be taxable.

10. Indemnity For Infringement of Intellectual Property Rights: Seller shall have no liability for infringement of any patents, trademarks, copyrights, trade dress, trade secrets or similar rights except as provided in this Part 10. Seller will defend and indemnify Buyer against allegations of infringement of U.S. Patents, U.S. Trademarks, copyrights, trade dress and trade secrets (hereinafter 'Intellectual Property Rights'). Seller will defend at its expense and will pay the cost of any settlement or damages awarded in an action brought against Buyer based on an allegation that an item sold pursuant to this contract infringes the Intellectual Property Rights of a third party. Seller's obligation to defend and indemnify Buyer is contingent on Buyer notifying Seller within ten (10) days after Buyer becomes aware of such allegations of infringement, and Seller having sole control over the defense of any allegations or actions including all negotiations for settlement or compromise. If an item sold hereunder is subject to a claim that it infringes the Intellectual Property Rights of a third party, Seller may, at its sole expense and option, procure for Buyer the right to continue using said item, replace or modify said item so as to make it noninfringing, or offer to accept return of said item and return the purchase price less a reasonable allowance for depreciation. Notwithstanding the foregoing, Seller shall have no liability for claims of infringement based on information provided by Buyer, or directed to items delivered hereunder for which the designs are specified in whole or part by Buyer, or infringements resulting from the modification, combination or use in a system of any item sold hereunder. The foregoing provisions of this Part 10 shall constitute Seller's sole and exclusive liability and Buyer's sole and exclusive remedy for infringement of Intellectual Property Rights.

If a claim is based on information provided by Buyer or if the design for an item delivered hereunder is specified in whole or in part by Buyer, Buyer shall defend and indemnify Seller for all costs, expenses or judgments resulting from any claim that such item infringes any patent, trademark, copyright, trade dress, trade secret or any similar right.

11. Force Majeure: Seller does not assume the risk of and shall not be liable for delay or failure to perform any of Seller's obligations by reason of circumstances beyond the reasonable control of Seller (hereinafter 'Events of Force Majeure'). Events of Force Majeure shall include without limitation, accidents, acts of God, strikes or labor disputes, acts, laws, rules or regulations of any government or government agency, fires, floods, delays or failures in delivery of carriers or suppliers, shortages of materials and any other cause beyond Seller's control.

12. Entire Agreement/Governing Law: The terms and conditions set forth herein, together with any amendments, modifications and any different terms or conditions expressly accepted by Seller in writing, shall constitute the entire Agreement concerning the items sold, and there are no oral or other representations or agreements which pertain thereto. This Agreement shall be governed in all respects by the law of the State of Ohio. No actions arising out of the sale of the items sold hereunder or this Agreement may be brought by either party more than two (2) years after the cause of action accrues.

9/91-P

G

3000-G1.p65, dd

Parker Hannifin Corporation
Hydraulic Valve Division
Elyria, Ohio, USA

Parker Hydraulics International Sales Offices

Return to ALPHA TOC
Return to SECTION TOC

North America

Hydraulics Group Headquarters
6035 Parkland Boulevard
Cleveland, OH 44124-4141 USA
Tel: 216-896-3000
Fax: 216-896-4031

Motion & Control Sales Division
651 Robbins Drive, PO Box 3500
Troy, MI 48007-3500 USA
Tel: 248-589-2400
Fax: 248-577-4890

Parker Hannifin Canada
Motion & Control Division – Milton
160 Chisholm Drive Milton
Ontario Canada L9T 3G9
Tel: 905-693-3011
Fax: 905-876-0788

Motion & Control Division – Montreal
2001 rue de l'aviation
Dorval, Quebec, H9P 2X6
Tel: 514-684-3000
Fax: 514-684-4191

Motion & Control Division – Calgary
3141B – 18th Street N.E.
Calgary, Alberta T2E 7K8
Tel: 403-291-9284
Fax: 403-291-9285

Mexico
Parker Hannifin de Mexico, S.A. C.V
Via de Ferrocarril a Matamoros 730
Apodaca, N.L. C.P. 66600, Mexico
Tel: 01-8181-566036 y 96

Parker Hannifin de México
Av eje uno norte num 100
Parque Industrial Toluca 2000
Toluca, Mex C.P. 50100
Tel: 52 722 2754200
Fax: 52 722 2799308

Mobile Sales

Mobile Systems Division
595 Schelter Road
Suite 100
Lincolnshire, IL 60069 USA
Tel: 847-821-1500
Fax: 847-821-7600

Pacific Region
8460 Kass Drive
Buena Park, CA 90621
Tel: 714-228-2510
Fax: 714-228-2511

Great Plains Region
931 Alice Court
St. Charles, IL 60174 USA
Tel: 630-377-0271
Fax: 630-377-0271

Midwest Region
4494 32nd Street
Grinnell, IA 50112 USA
Tel: 641-236-3694
Fax: 641-236-8884

Southern Region
2300 Bush Circle
Carrollton, TX 75007 USA
Tel: 972-307-2949
Fax: 972-307-9410

Eastern Region
100 Corporate Drive
Lebanon, NJ 08833 USA
Tel: 610-330-0970
Fax: 925-396-6481

Industrial Sales

Great Lakes Region
3700 Embassy Parkway Suite 260
Fairlawn, OH 44333 USA
Tel: 330-670-2680
Fax: 330-670-2681

Southern Region
1225 Old Alpharetta Road Suite 290
Alpharetta, GA 30005 USA
Tel: 770-619-9767
Fax: 770-619-9806

Chicago Region
1163 E. Ogden Avenue
Suite 705, #358
Naperville, IL 60563 USA
Tel: 630-964-0796
Fax: 866-473-9274

Pacific Region
8460 Kass Drive
Buena Park, CA 90621
Tel: 714-228-2510
Fax: 714-228-2511

Eastern Region
100 Corporate Drive
Lebanon, NJ 08833 USA
Tel: 908-236-4121
Fax: 908-236-4146

Europe

Europe Hydraulics Group
Parker Hannifin Corporation
Parker House
55 Maylands Avenue
Hemel Hempstead, Herts
HP2 4SJ England
Tel: 44 1442 458000
Fax: 44 1442 458085

Austria
Parker Hannifin GmbH
Badener Strasse 12
A-2700 Wiener Neustadt, Austria
Tel: 43 2622 23501-0
Fax: 43 2622 66212

Belgium
Parker Hannifin SA NV
Parc Industriel Sud, Zone II
Rue du Bosquet 23
B-1400 Nivelles, Belgium
Tel: 32 67 280900
Fax: 32 67 280999

Czech Republic
Parker Hannifin s.r.o.
Parkerova 623
250 67 Klecany, Czech Republic
Tel: 420 284 083 111
Fax: 420 284 083 112

Denmark
Parker Hannifin Denmark A/S
Industriparken 37
2750 Ballerup, Denmark
Tel: 45 43 56 04 00
Fax: 45 43 73 31 07

Finland
Parker Hannifin Oy
Ylästöntie 16
FIN-01510 Vantaa, Finland
Tel: 358 9 476 731
Fax: 358 9 4767 3200

Europe

France
Parker Hannifin France SAS
142, rue de la Foret
74130 Contamine sur Arve, France
Tel: 33 450 25 80 25
Fax: 33 450 03 67 37

Germany/Switzerland
Parker Hannifin GmbH & Co. KG
Pat-Parker-Platz 1
41564 Kaarst, Germany
Tel: 49 (0) 2131 4016 0
Fax: 49 (0) 2131 4016 9199

Greece
Parker Hannifin Corporation
Athens Representative Office
197 Syngrou Av.
171 21 Nea Smyrni, Athens, Greece
Tel: 0030 210 933-6450
Fax: 0030 210 933-6451

Hungary
Parker Hannifin Corporation
Hungarian Trade Representative Office
H-1149 Budapest
Egressy u. 100, Hungary
Tel: 36 12204155
Fax: 36 14221525

Ireland
Parker Hannifin Ireland Ltd.
Blackthorn Close,
Stillorgan Industrial Park
Blackrock, Co Dublin, Ireland
Tel: 353 1 293 9999
Fax 353 1 293 9900

Italy
Parker Hannifin S.p.A.
Via Privata Archimede 1
20094 Corsico (MI), Italy
Tel: 39 02 451921
Fax: 39 02 4479340

The Netherlands
Parker Hannifin B.V.
Edisonstraat 1
7575 AT Oldenzaal, The Netherlands
Tel: 31 541 585000
Fax: 31 541 585459

Norway
Parker Hannifin A/S
Berghagan
PO Box 3008
N-1402 Ski, Norway
Tel: 47 64 911000
Fax: 47 64 911090

Poland
Parker Hannifin Sp z.o.o.
ul. Równolegla 8
PL 02-435 Warsaw, Poland
Tel: 48 22 573 24 00
Fax: 48 22 573 24 03

Portugal
Parker Hannifin Portugal, Lda.
Travessa da Bataria 184 R/C
Dto./1 Esq.
Leça da Palmeira-4450-625, Portugal
Tel: 351 22 9997360
Fax: 351 22 9961527

(continued on next page)

Parker Hydraulics International Sales Offices

Return to ALPHA TOC
Return to SECTION TOC

Europe

Romania
Hidro Consulting Impex SRL
Bucaresti Parker Representative Office
Bld. Ferdinand nr. 27 Sector 2
RO-00001 Bucarest, Romania
Tel: 0040 21 252 1382
Fax: 0040 21 252 3381

Russia
Parker Hannifin LLC
Rossolimo st., 17, floor 4
119021 Moscow, Russia
Tel: 7 095 580 91 45
Fax: 7 095 580 91 45

Parker Hannifin LLC
Branch Office Sakhalin
Zheleznodorozhnaya str., 174-A
693008 Yuzhno-Sakhalinsk, Russia
Tel: 7 4242 77 95 48
Fax: 7 4242 77 27 42

Slovenia
Parker Hannifin Corporation
Vel. Bucna vas 7
SI-8000 Novo Mesto, Slovenia
Tel: 386 7337 6650
Fax: 386 7337 6651

Spain
Parker Hannifin España SA
Parque Industrial Las Monjas
Calle Estaciones 8
28850 Torrejón de Ardoz
Madrid, Spain
Tel: 34 91 6757300
Fax: 34 91 6757711

Sweden
Parker Hannifin AB
Fagerstagatan 51
Box 8314
SE-163 08 Spånga, Sweden
Tel: 46 (0)8 59 79 5000
Fax: 46 (0)8 59 79 5110

Turkey
Parker Hannifin Corporation
Merter Is Merkezi
Gen. Ali Riza Gurcan Cad. No: 2 / 67
34067 Merter, Istanbul, Turkey
Tel: 90 212 482 91 06
Fax: 90 212 482 91 10

Ukraine
Parker Hannifin Corporation
Vul. Velyka Vasylkivska 9/2 Office 59
01004 Kiev, Ukraine
Tel: 380 44 494 2731
Fax: 380 44 494 2730

United Kingdom
Parker Hannifin plc
Tachbrook Park Drive
Tachbrook Park
Warwick, CV34 6TU, England
Tel: 44 1926 317878
Fax: 44 1926 317855

South Africa

Parker Hannifin Africa Pty Ltd.
Parker Place
10 Berne Avenue Aeroport
P.O. Box 1153
Kempton Park 1620,
Republic of South Africa
Tel: 27 11 9610700
Fax: 27 11 3927213

Middle East

Azerbaijan
Parker Hannifin plc
Azpar, Technical Representative
140 Alovsat Guliyev St. Apt. 10
370000 Baku, Azerbaijan
Tel: 994 12 498 3966
Fax: 994 12 498 3966

Kazakhstan
Parker Hannifin
Gateway Ventures CA LTD, Representative
7A Kabanbai Batira
480100 Alamty, Kazakhstan
Tel: 7 3272 505 800
Fax: 7 3272 505 801

United Arab Emirates
Parker Hannifin Corporation
PO Box 46451
Abu Dhabi, United Arab Emirates
Tel: 971 2 6788587
Fax: 971 2 6793812

Asia Pacific

Asia Pacific Headquarters
Parker Hannifin Hong Kong Ltd.
8/F, Kin Yip Plaza, 9 Cheung Yee Street
Cheung Sha Wan, Kowloon
Hong Kong
Tel: 852 2428 8008
Fax: 852 2480 4256

Australia Headquarters
Parker Hannifin Pty Ltd.
9 Carrington Road
Castle Hill, NSW 2154, Australia
Tel: 612 9634 7777
Fax: 612 9842 5111

China Headquarters
Parker Hannifin Fluid Power Systems & Components (Shanghai) Co., Ltd.
280 Yunqiao Road,
Jinqiao Export Processing Zone
Shanghai 201206, China
Tel: 86 21 5031 2525
Fax: 86 21 5834 3714

Parker Hannifin Beijing Office
Suite B9-11, 21/F, Hanwei Plaza
No. 7 Guanghua Road
Chaoyang District
Beijing, 100004, China
Tel: 86 10 6561 0520
Fax: 86 10 6561 0526

India
Parker Hannifin India Pvt Ltd.
Plot No. EL-26, TTC Industrial Area
Mahape, Navi Mumbai 400 709, India
Tel: 0091 022 56137081/2/3/4
Fax 0091 022 27686841, 27686618

Asia Pacific

Japan
Parker Hannifin Japan Ltd.
4-2-1 Tsujido-Shinmachi,
Fujisawa, Kanagawa, 251-0042, Japan
Tel: 81 466 35 3050
Fax: 81 466 35 2019

Korea Headquarters
Parker Hannifin Korea Ltd.
Daehwa Venture Plaza, 6F
169 Samsung-Dong
Kangnam-ku, Seoul, 135-090, Korea
Tel: 82 2 559 0400
Fax: 82 2 556 8187

Singapore
Parker Hannifin Singapore
No. 11, Fourth Chin Bee Road
Jurong Town, Singapore, 619702
Tel: 65 6887 6300
Fax: 65 6265 5125

Taiwan
Parker Hannifin Taiwan Co., Ltd.
No. 40, Wuchiuan 3rd Rd.,
Wuku Industrial Park
Taipei County, Taiwan 248, R.O.C.
Tel: 886 2 2298 8987
Fax: 886 2 2298 8982

Thailand
Parker Hannifin Thailand Co., Ltd.
1023, 3rd floor, TPS building
Pattanakarn Road, Suanluang
Bangkok 10250, Thailand
Tel: 662 717 8140
Fax: 662 717 8148

Latin America

Pan American Division
7400 NW 19th Street, Suite A
Miami, FL 33126 USA
Tel: 305-470-8800
Fax: 305-470-8808

Argentina
Parker Hannifin Argentina SAIC
Stephenson 2711 esq. Costa Rica
1667 Tortuguitas
Buenos Aires, Argentina
Tel: 54 3327 44 4129
Fax: 54 3327 44 4199

Brazil
Hydraulics Division
Parker Hannifin Ind. e Com. Ltda.
Av. FredericoRitter, 1100
Cachoeirinha RS, 94930-000 Brazil
Tel: 55 51 3470 9144
Fax: 55 51 3470 3100

Chile
Parker Hannifin Chile Ltd.a.
Av. Americo Vespucio 2760-E
Conchali - Santiago, Chile
Tel: 56-2-623-1216
Fax: 56-2-623-1421

Venezuela
Parker Hannifin de Venezuela, S.A.
Av. Principal con calle Miraima
Edificio Draza
Boleita Norte
Caracas, Venezuela
Tel: 58 212 238 5422
Fax: 58 212 239 2272

Parker Hannifin Corporation
Hydraulic Valve Division
Elyria, Ohio, USA

Return to ALPHA TOC
Return to SECTION TOC

Parker Hannifin Corporation
6035 Parkland Blvd.
Cleveland, Ohio 44124-4141
Telephone: (216) 896-3000
Fax: (216) 896-4000
www.parker.com

Parker Hannifin Corporation

About Parker Hannifin Corporation

Parker Hannifin is a leading global motion-control company dedicated to delivering premier customer service. A Fortune 500 corporation listed on the New York Stock Exchange (PH), our components and systems comprise over 1,400 product lines that control motion in some 1,000 industrial and aerospace markets. Parker is the only manufacturer to offer its customers a choice of hydraulic, pneumatic, and electromechanical motion-control solutions. Our Company has the largest distribution network in its field, with over 7,500 distributors serving nearly 400,000 customers worldwide.

Parker's Charter

To be a leading worldwide manufacturer of components and systems for the builders and users of durable goods. More specifically, we will design, market and manufacture products controlling motion, flow and pressure. We will achieve profitable growth through premier customer service.

Product Information

North American customers seeking product information, the location of a nearby distributor, or repair services will receive prompt attention by calling the Parker Product Information Center at our toll-free number: 1-800-C-PARKER (1-800-272-7537). In Europe, call 00800-C-PARKER-H (00800-2727-5374).

The Aerospace Group is a leader in the development, design, manufacture and servicing of control systems and components for aerospace and related high-technology markets, while achieving growth through premier customer service.

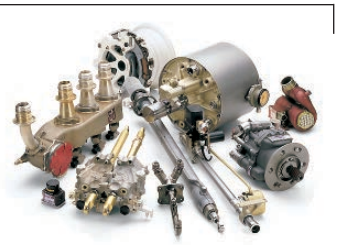

The Climate & Industrial Controls Group designs, manufactures and markets system-control and fluid-handling components and systems to refrigeration, air-conditioning and industrial customers worldwide.

The Fluid Connectors Group designs, manufactures and markets rigid and flexible connectors, and associated products used in pneumatic and fluid systems.

The Seal Group designs, manufactures and distributes industrial and commercial sealing devices and related products by providing superior quality and total customer satisfaction.

The Hydraulics Group designs, produces and markets a full spectrum of hydraulic components and systems to builders and users of industrial and mobile machinery and equipment.

The Filtration Group designs, manufactures and markets quality filtration and clarification products, providing customers with the best value, quality, technical support, and global availability.

The Automation Group is a leading supplier of pneumatic and electromechanical components and systems to automation customers worldwide.

The Instrumentation Group is a global leader in the design, manufacture and distribution of high-quality critical flow components for worldwide process instrumentation, ultra-high-purity, medical and analytical applications.

Return to ALPHA TOC

Return to SECTION TOC

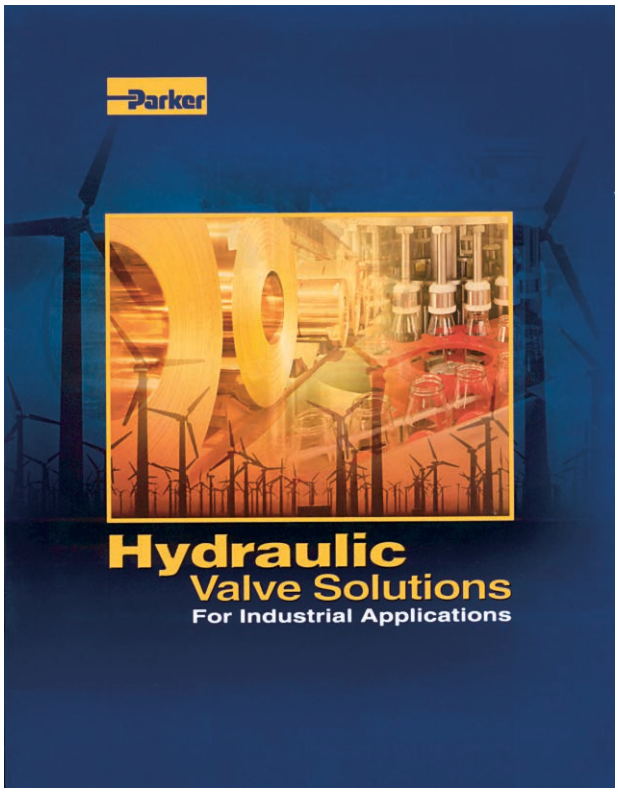

Bulletin HY14-2530/US
Catalog CD HY14-2530/US (included inside brochure)

For the latest hydraulic valve information
www.parker.com/hydraulicvalve

To locate your nearest hydraulic valve distributor
www.parker.com/hyd/distloc

For North America, Europe and the rest of the world regional offices, see Parker Hydraulics International Sales Offices at the back of this catalog.

Parker Hydraulic Valve wants to keep you informed. Listed below are connection opportunities for you to resource additional information or speak directly with the industry's most knowledgeable hydraulic valve professionals.

To order literature or locate a distributor by phone
1-800-C-Parker

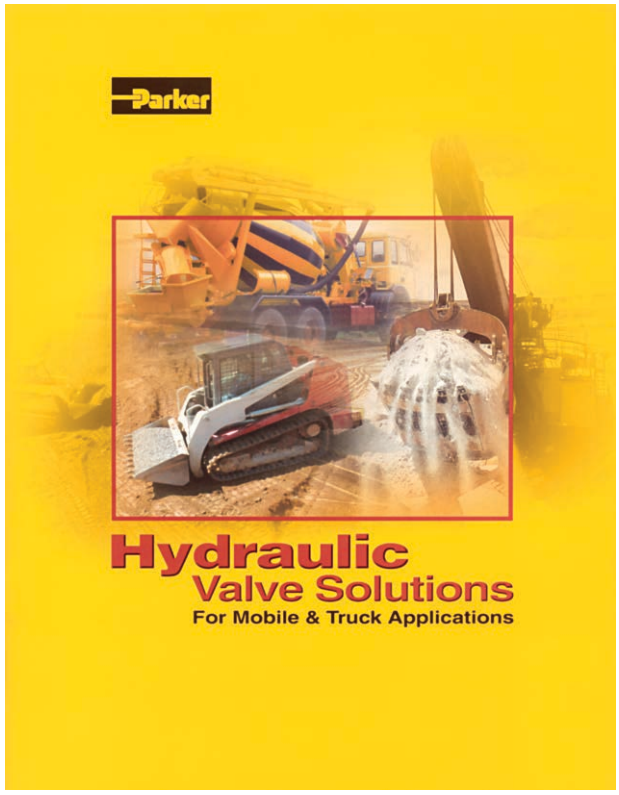

Bulletin HY14-2400/US
Catalog CD HY14-2400/US (included inside brochure)

Parker Hannifin Corporation
Hydraulic Valve Division
520 Ternes Avenue
Elyria, Ohio 44035 USA
Tel: (440) 366-5200
Fax: (440) 366-5253
www.parker.com/hydraulicvalve

Catalog HY14-3000/US,
3M, 7/06, PageLitho